REV. | LERA LESLIE E. ROBERTSON ASSOCIATES, RLLP CONSULTING STRUCTURAL ENGINEERS | P | DRAWING NO.

DRAFT

DESIGN

CHECK

WTC

DRAWING

BOOK

20

BOX 5

SKILLING, HELLE, CHRISTIANSEN, ROBERTSON

PROJECT THE WORLD TRADE CENTER | TITLE DRAWING BOOK 20-STRUCTURAL STEEL-INDEX, DATES | DATE 10/ 6/72

REVISIONS

UTED 18/73

WTCI-40-LERA

DWG. NO.	TITLE	DATE
20-AB- 0	INDEX & DATE	PAGE 5/18/73
20-AB- 0.1	GEN. NOTES	10/ 9/68
20-A - 1	DETAIL 1	10/ 9/68
20-A - 2	DETAIL 2	11/20/68
20-AB- 3	DETAIL 3	10/ 9/68
20-AB- 4	DETAIL 4	11/20/68
20-AB- 5	DETAIL 5	11/20/68
20-AB- 6	DETAIL 6	10/ 9/68
20-AB- 7	DETAIL 7	11/20/68
20-AB- 8	DETAIL 8	11/20/68
20-AB- 8.1	DETAIL 8	10/ 9/68
20-A - 9	DETAIL 9	10/ 9/68
20-AB-10	DETAIL 10	6/24/69
20-B -11	DETAIL 11	10/ 9/68
20-B -12	DETAIL 12	10/ 9/68
20-AB-13	DETAIL 13	10/ 9/68
20-AB-14	DETAIL 14	10/ 9/68
20-AB-15	DETAIL 15	3/12/71
20-AB-16	CONN DETAILS	10/ 9/68
20-A -20	DETAIL 20	3/21/69
20-B -21	DETAIL 21	3/21/69
20-AB-50	DETAIL 50	10/ 9/68
20-A -51	DETAIL 51	10/ 9/68
20-AB-53	DETAIL 53	10/ 9/68
20-A -54	DETAIL 54	10/ 9/68
20-B -55	DETAIL 55	11/27/68
20-A -60	DETAIL 60	10/ 9/68
20-A -61	DETAIL 61	10/ 9/68
20-A -62	DETAIL 62	10/ 9/68
20-A -63	DETAIL 63	10/ 9/68
20-AB-64	DETAIL 64	6/24/69
20-A -65	DETAIL 65	3/21/69
20-A -66	DETAIL 66	10/ 9/68
20-AB-67	DETAIL 67	11/27/68
20-AB-68	DETAIL 68	11/27/68
20-A -69	DETAIL 69	10/ 9/68
20-B -70	DETAIL 70	11/27/68
20-B -71	DETAIL 71	3/21/69
20-AB-72	DETAIL 72	11/22/68
20-A -73	DETAIL 73	4/ 9/69
20-AB-75	DETAIL 75	8/19/69

Framing members for core of buildings

FWDyer

LICENSED PROFESSIONAL ENGINEER LESLIE E. ROBERTSON No. 34360 UNIVERSITY OF THE STATE OF NEW YORK

20-AB-0

REVISIONS

10/9/68

GENERAL NOTES

1. The details given in Book 20 define support framing.

2. The locations of such support framing, and detail numbers, are given in Structural Steel Plans, using the following symbol:

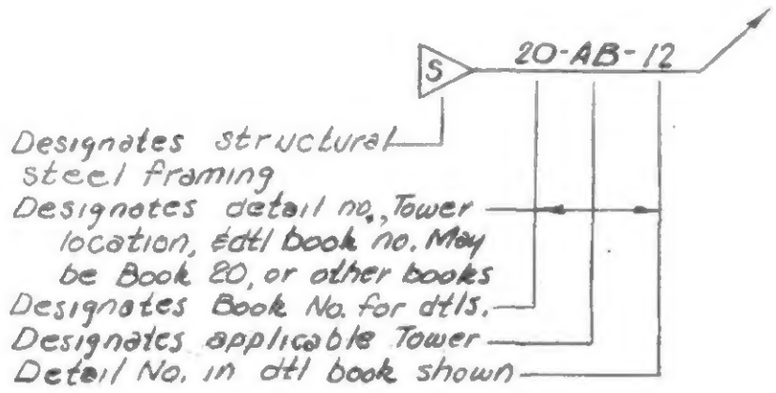

3. Dimensions which locate new members in plan, except those dimensions which govern the length of new members, are subject to verification based on final drawings. Connection details include field welds which permit relocations without re-detailing new or existing members.

4. Revisions after fabrication shall conform to current AISC and AWS specifications for building construction, and to project drawings and specifications for the fabricated members being revised.

5. Standard AISC connections shall be used where shown in the drawings, or where member reactions are given in kips, or where connection details are not otherwise shown. Bolted connections shall have a minimum of two 3/4" ∅ A325 bolts, unless otherwise shown.

6. All bolts shall be ASTM A325, friction-type, unless otherwise shown in the drawings.

7. All manual welding electrodes shall be E70XX low hydrogen, unless otherwise shown in the drawings.

8. All steel parts shall be ASTM A36, unless otherwise shown in the drawings.

9. The requirements and general notes given in the following drawings apply to the details of Book 20 when pertinent:

   1-A2-44
   5-AB1-0
   6-AB1-1

LICENSED PROFESSIONAL ENGINEER
LESLIE E. ROBERTSON
No. 34360
UNIVERSITY OF THE STATE OF NEW YORK

SKILLING, HELLE, CHRISTIANSEN, ROBERTSON — Structural & Civil Engineers

PROJECT THE WORLD TRADE CENTER | TITLE STRUCTURAL STEEL - DETAIL 1 | DATE 9-5-68

REVISIONS

9-68

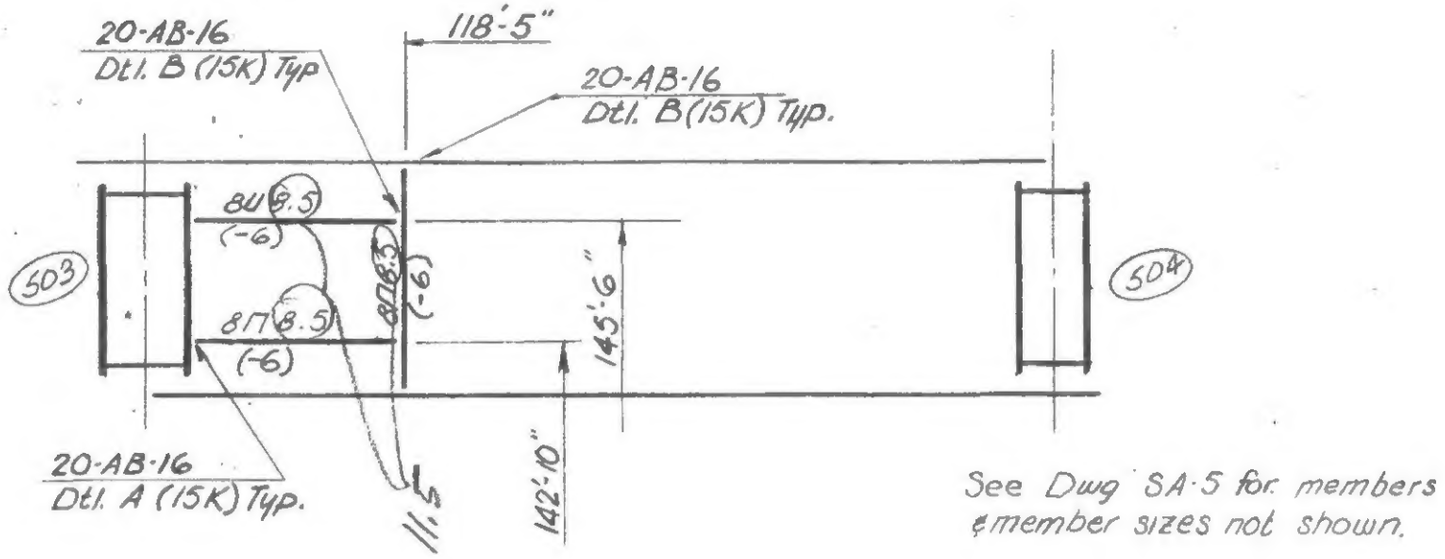

See Dwg SA-5 for members & member sizes not shown.

S-2 (ELEV 274)

LICENSED PROFESSIONAL ENGINEER
LESLIE E. ROBERTSON
No. 34360
UNIVERSITY OF THE STATE OF NEW YORK

TSIGNED

DRAWN

REVIEWED

20-A-1

SKILLING, HELLE, CHRISTIANSEN, ROBERTSON — Structural & Civil Engineers

PROJECT THE WORLD TRADE CENTER | TITLE STRUCTURAL STEEL - DETAIL 2 | DATE 7-17-68

REVISIONS

3-29-68
9-5-68
10-9-68
11-20-68

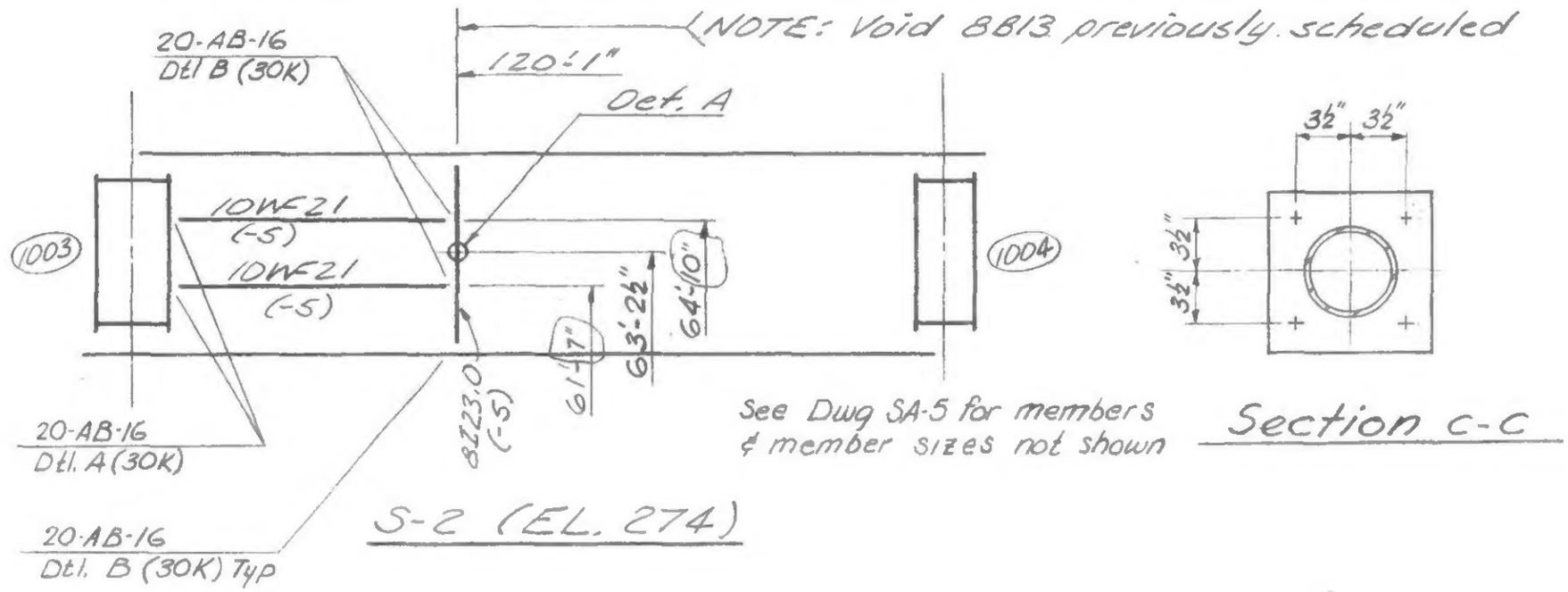

Section C-C

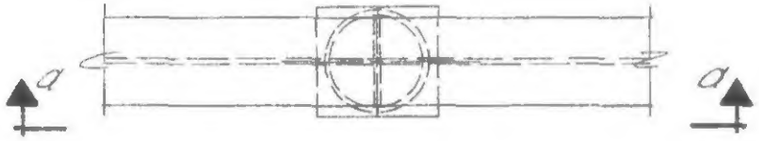

PLAN

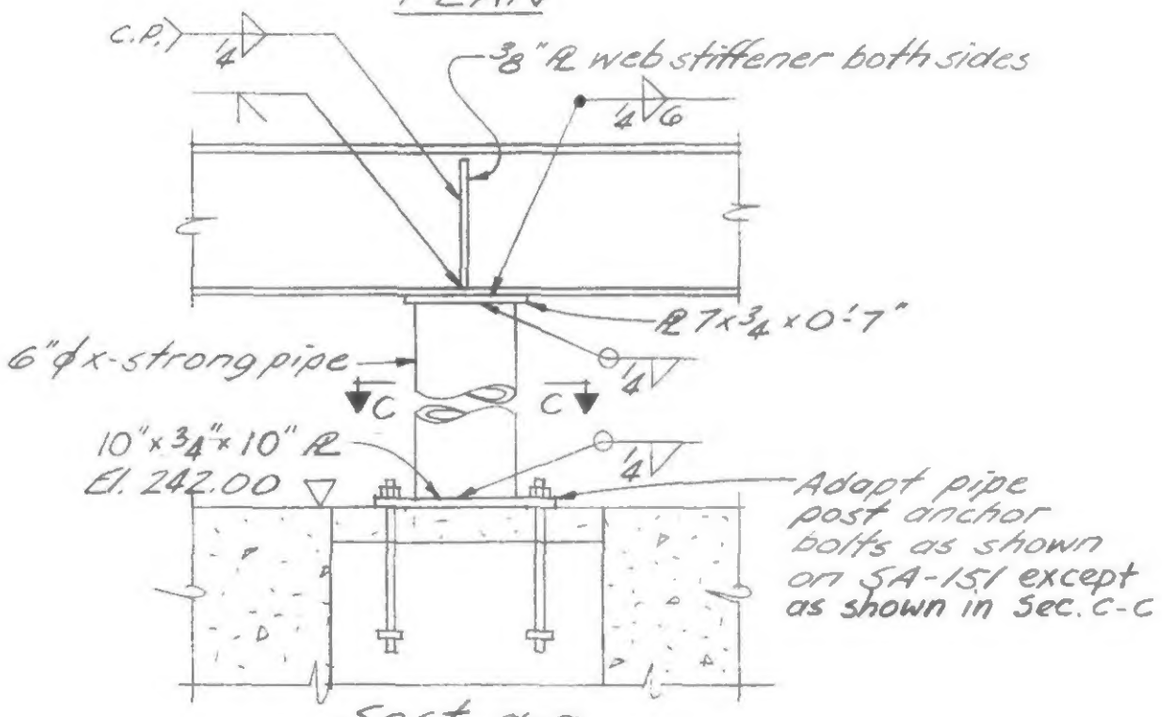

Sect. a-a

DET. A

LICENSED PROFESSIONAL ENGINEER
LESLIE E. ROBERTSON
No. 34360
UNIVERSITY OF THE STATE OF NEW YORK

DESIGNED

DRAWN

REVIEWED

20-A-2

SKILLING, HELLE, CHRISTIANSEN, ROBERTSON — Structural & Civil Engineers

PROJECT THE WORLD TRADE CENTER | TITLE STRUCTURAL STEEL - DETAIL 3 | DATE 9-5-69

REVISIONS

10-9-68

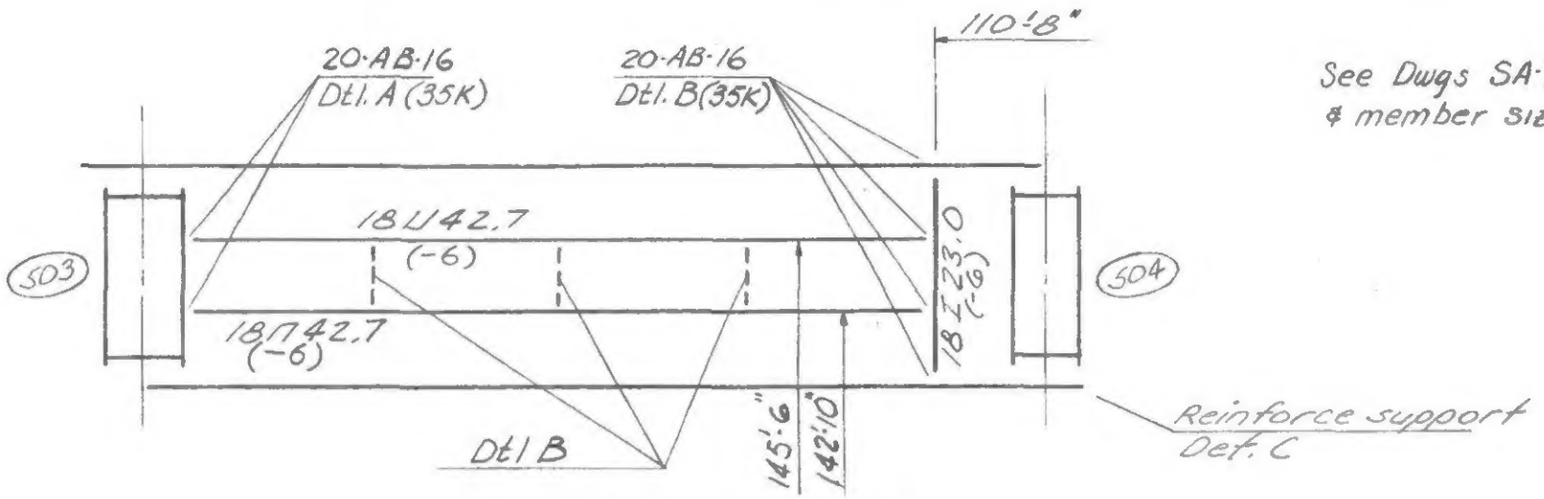

See Dwgs SA-7 & SB-7 for members & member sizes not shown.

PLAN (ELEV 294)

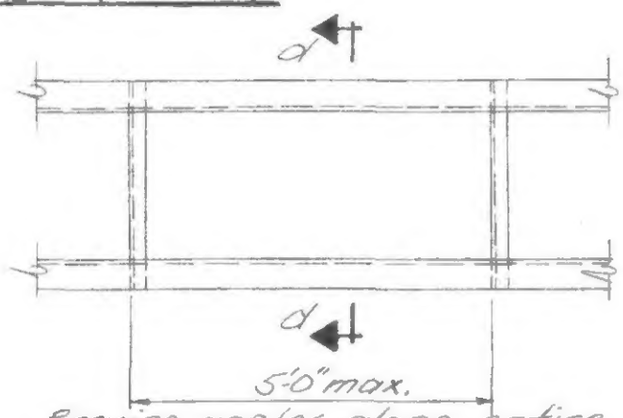

Bracing angles along entire channel span clear of piping

Det. B

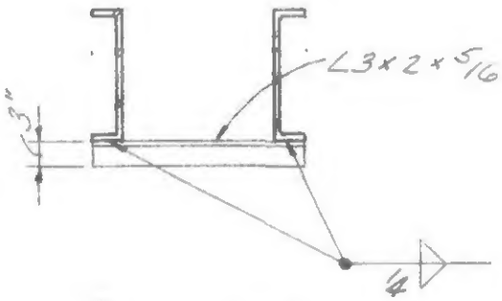

Sec. d-d

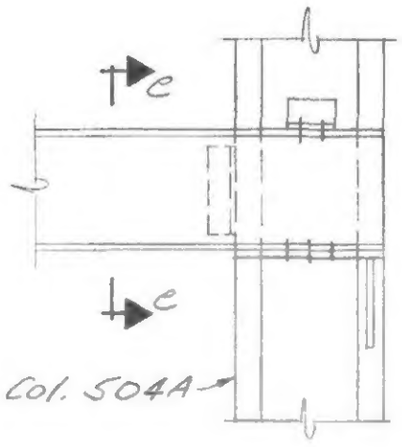

Det. C

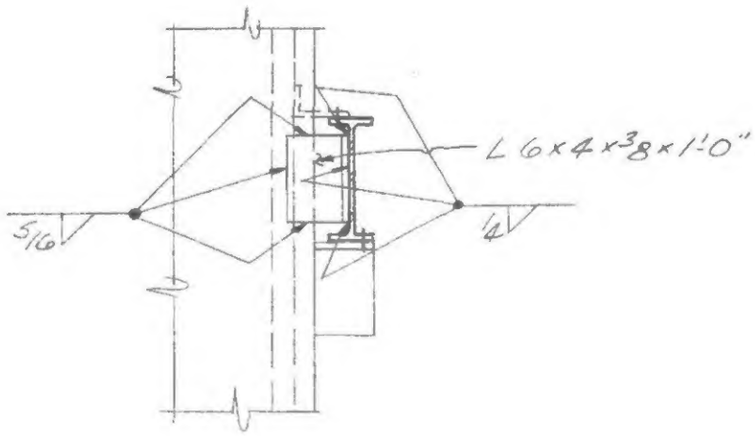

Sec. e-e

LICENSED PROFESSIONAL ENGINEER — LESLIE E. ROBERTSON — No. 34360 — UNIVERSITY OF THE STATE OF NEW YORK

DESIGNED

DRAWN

REVIEWED

20-AB-3

SKILLING, HELLE, CHRISTIANSEN, ROBERTSON — Structural & Civil Engineers

PROJECT THE WORLD TRADE CENTER | TITLE STRUCTURAL STEEL - DETAIL 4 | DATE 9-5-68

REVISIONS

1 9-68

11-20-68

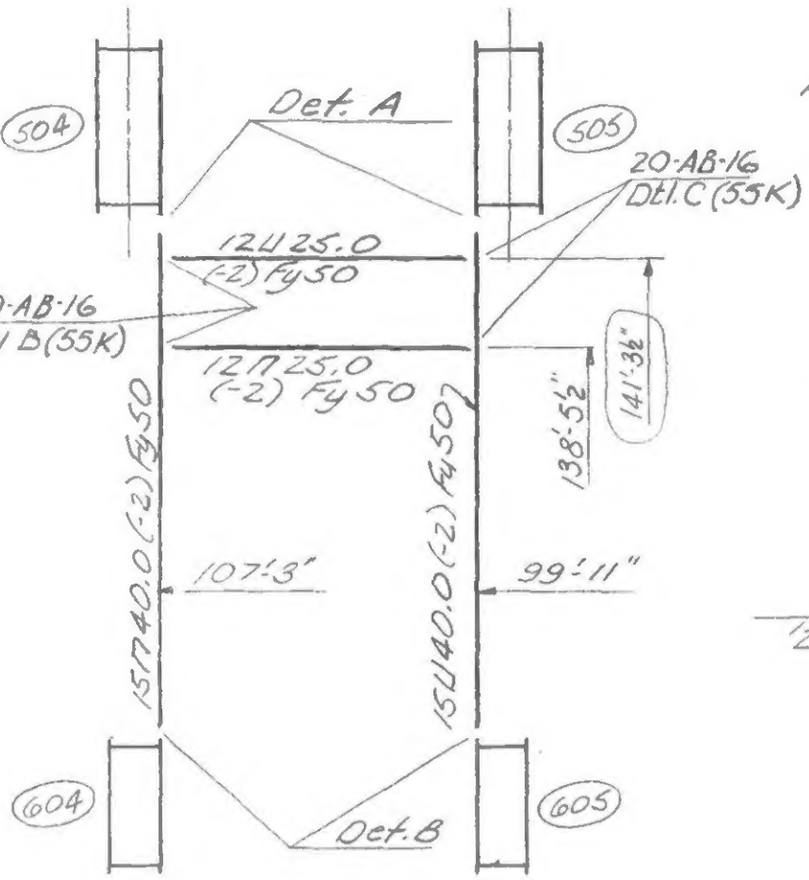

PLAN (Floor 1)

See Dwgs SA-8 & SB-8 for members & member sizes not shown.

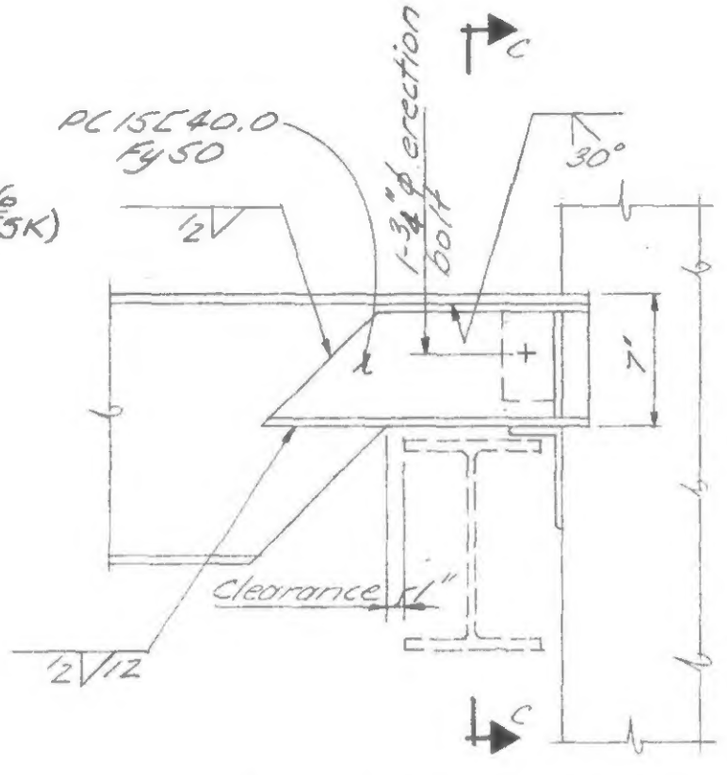

Elevation

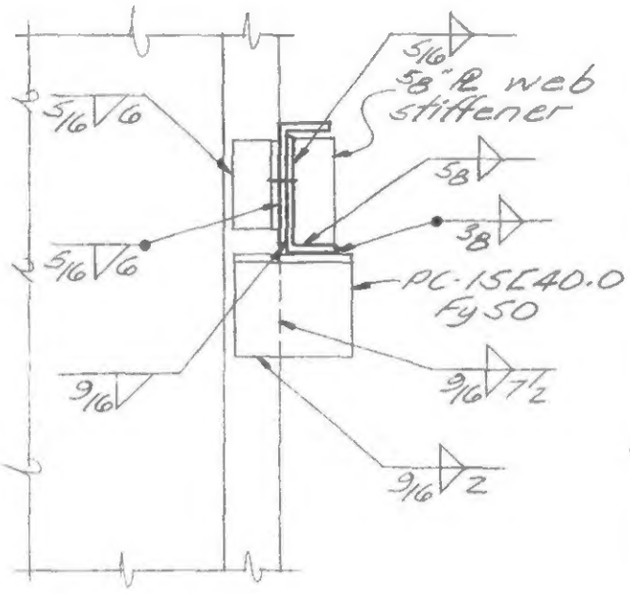

Sec. C-C

Det. A

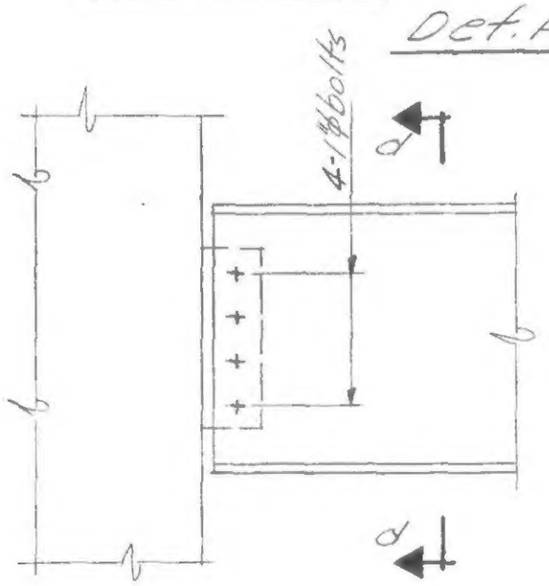

Elevation

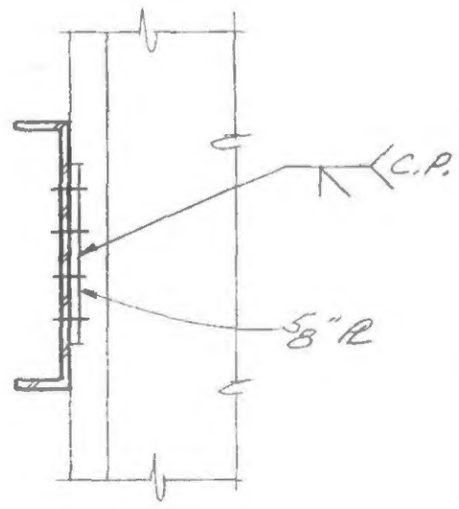

Sec. d-d

Det. B

LICENSED PROFESSIONAL ENGINEER
LESLIE E. ROBERTSON
No. 34360
UNIVERSITY OF THE STATE OF NEW YORK

DESIGNED

DRAWN

REVIEWED

20-AB-4

SKILLING, HELLE, CHRISTIANSEN, ROBERTSON — Structural & Civil Engineers

PROJECT: THE WORLD TRADE CENTER | TITLE: STRUCTURAL STEEL - DETAIL 5 | DATE: 9-15-68

REVISIONS

1. 9-68
11. 20-68

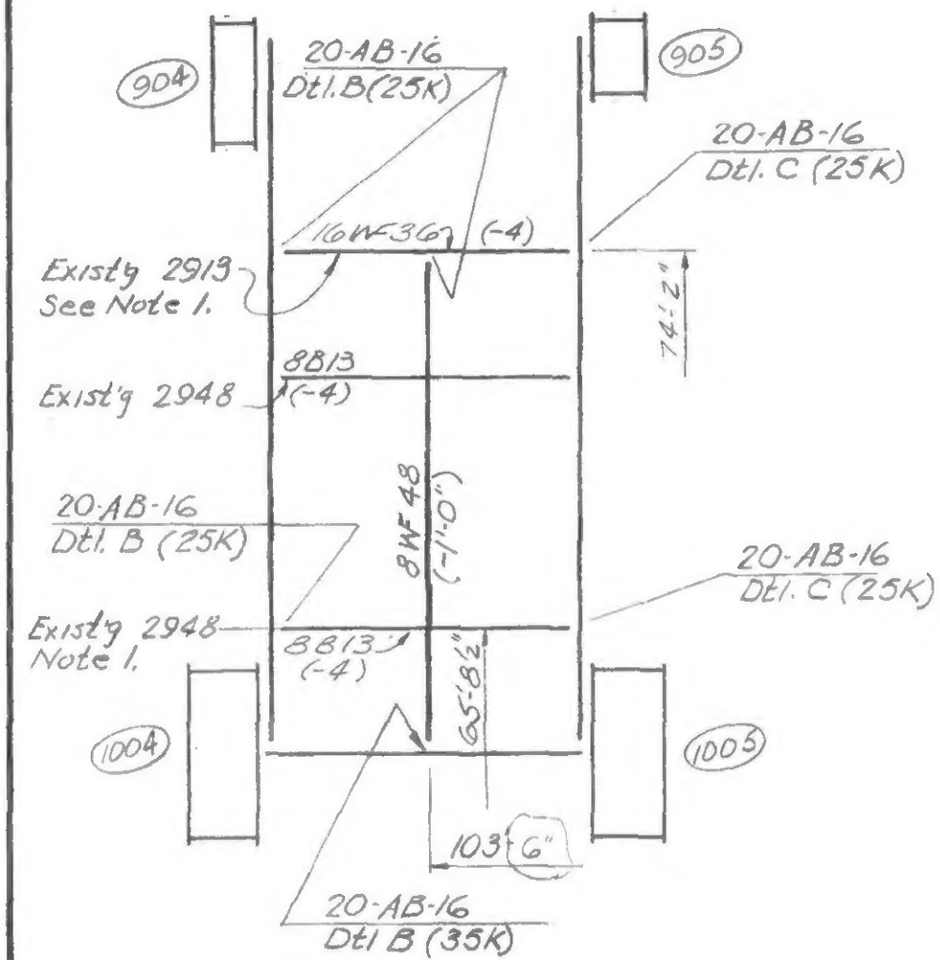

PLAN (Floor 4)

Notes:

1. Members No 2913 & 2948 are reversed in position from that previously shown in Structural Steel Plans.
2. See Dwgs SA-12 & SB-12 for members & member sizes not shown.

LICENSED PROFESSIONAL ENGINEER — LESLIE E. ROBERTSON — No. 34360 — UNIVERSITY OF THE STATE OF NEW YORK

DESIGNED

DRAWN

REVIEWED

20-AB-5

SKILLING, HELLE, CHRISTIANSEN, ROBERTSON — Structural & Civil Engineers

PROJECT THE WORLD TRADE CENTER | TITLE STRUCTURAL STEEL - DETAILS | DATE 9-5-16

REVISIONS

'0-9-68

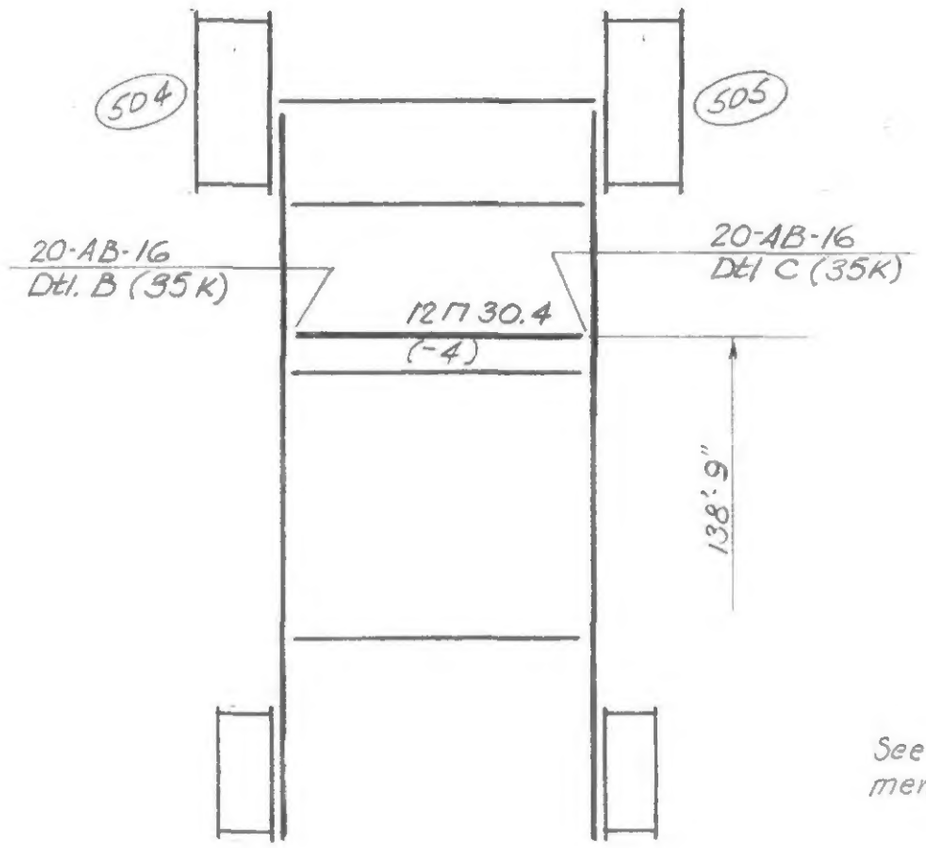

PLAN (Floor 6)

See Dwgs SA-14 & SB-14 for members & member sizes not shown.

LICENSED PROFESSIONAL ENGINEER
LESLIE E. ROBERTSON
No. 34360
UNIVERSITY OF THE STATE OF NEW YORK

DESIGNED

DRAWN

REVIEWED

20-AB-6

SKILLING, HELLE, CHRISTIANSEN, ROBERTSON — Structural & Civil Engineers

PROJECT THE WORLD TRADE CENTER | TITLE STRUCTURAL STEEL - DETAIL 7 | DATE 9-15-68

REVISIONS

-9-68

" 20-68

See Dwgs SA-15 & SB-15 for members & member sizes not shown.

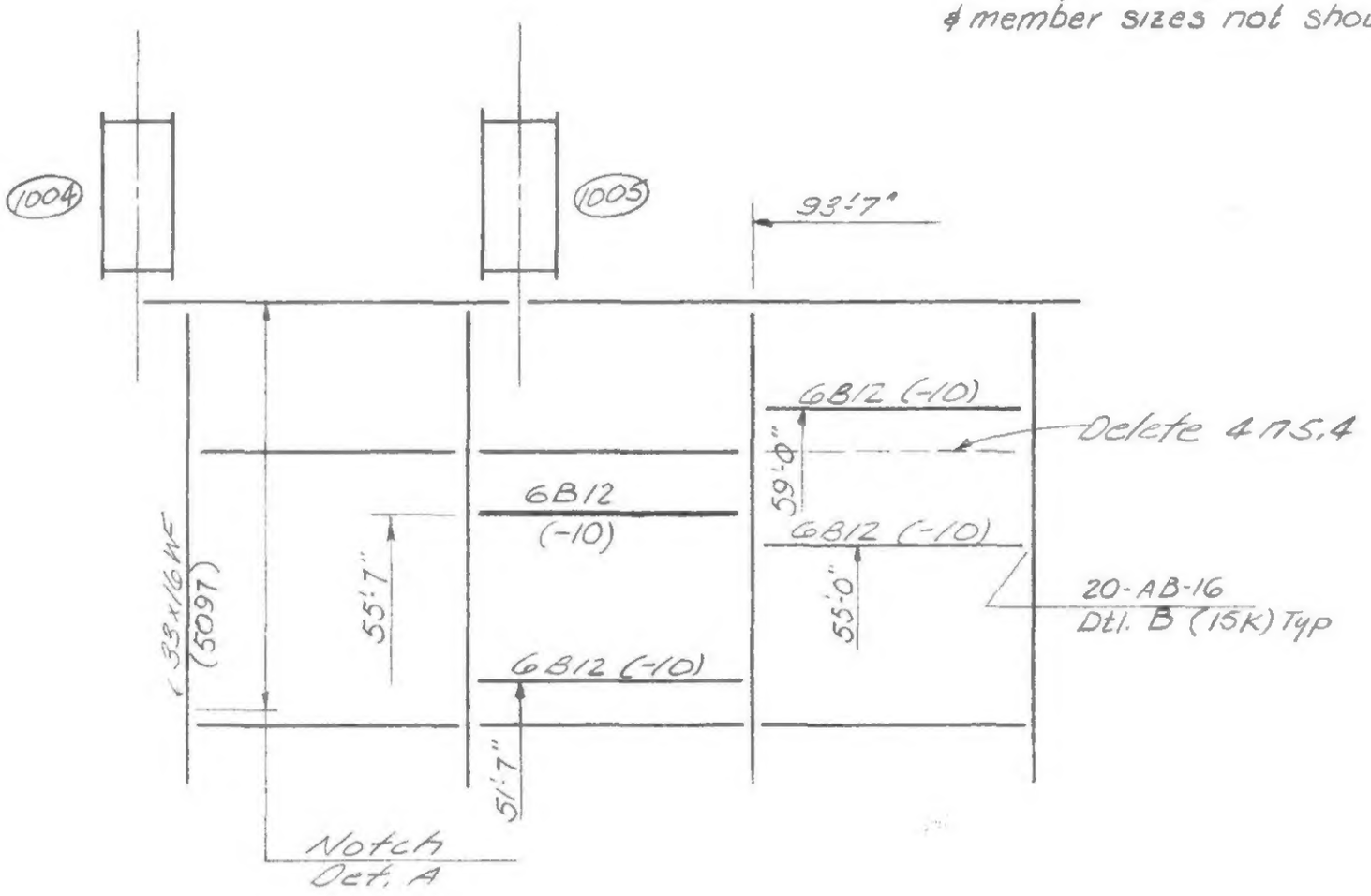

PLAN (Floor 7)

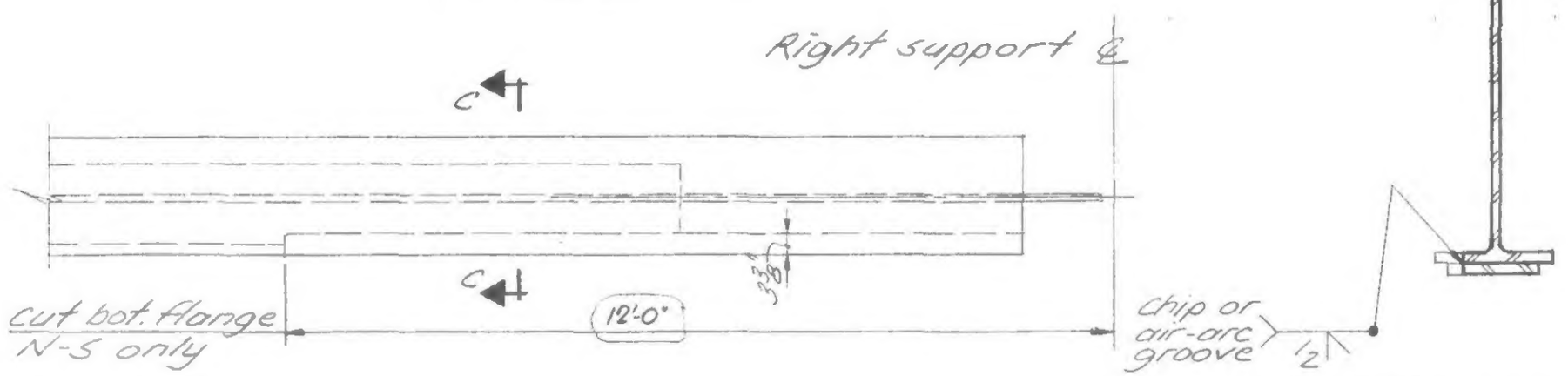

Det. A.

Sec. C-C

LICENSED PROFESSIONAL ENGINEER — LESLIE E. ROBERTSON — No. 34360 — UNIVERSITY OF THE STATE OF NEW YORK

DESIGNED

DRAWN

REVIEWED

20-AB-7

SKILLING, HELLE, CHRISTIANSEN, ROBERTSON — Structural & Civil Engineers

PROJECT THE WORLD TRADE CENTER | TITLE STRUCTURAL STEEL - DETAIL 8 | DATE 9-5-68

REVISIONS
9-68
11-20-68

See Dwgs SA-17 & SB-17 for members & member sizes not shown.

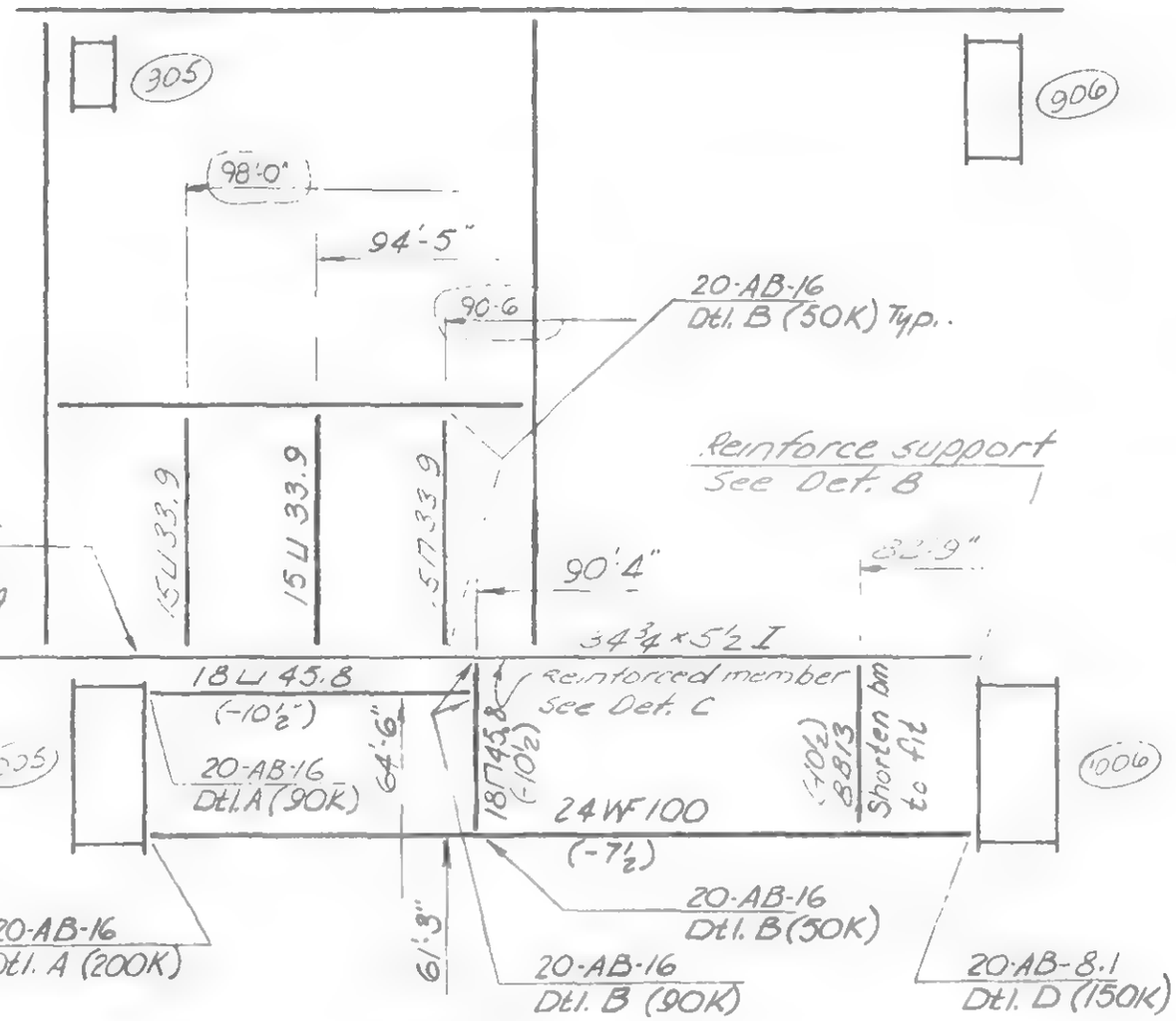

PLAN (Floor 9)

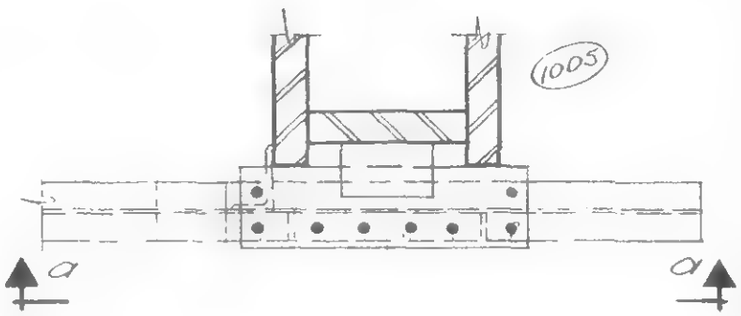

PLAN Det. A

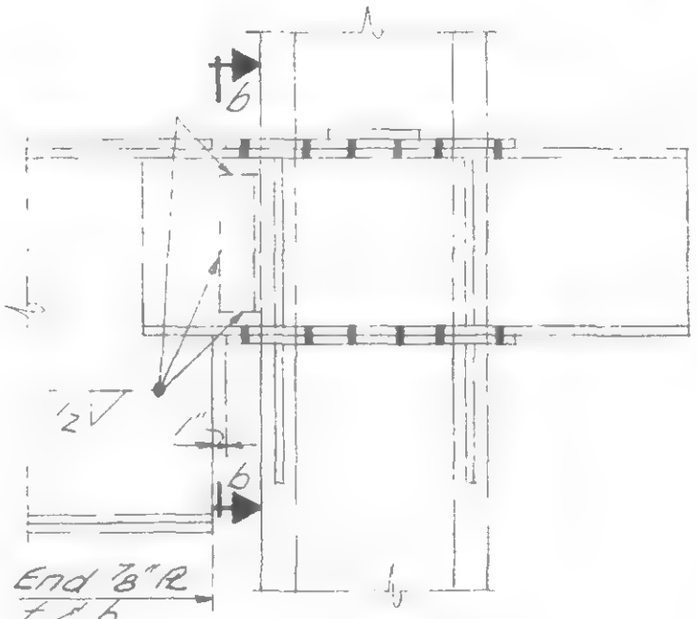

Section a-a

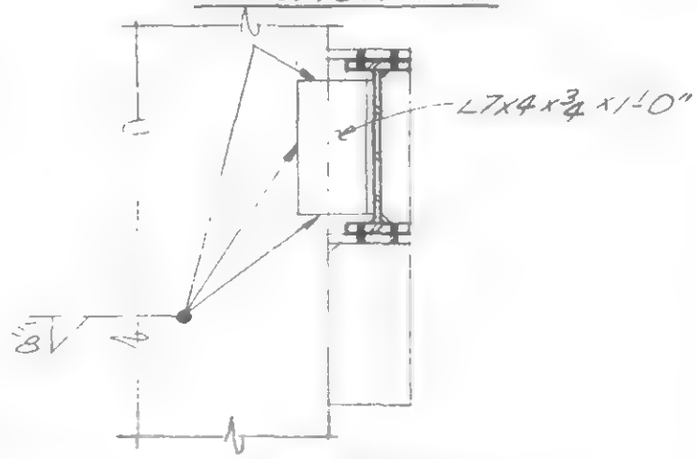

Section b-b

Det. A

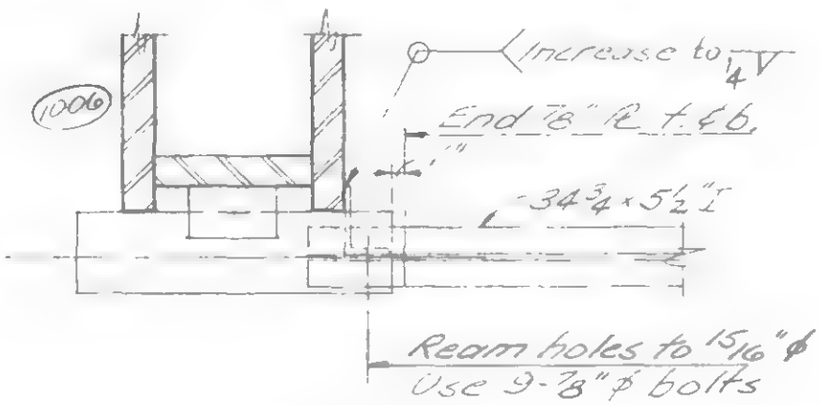

Det. B

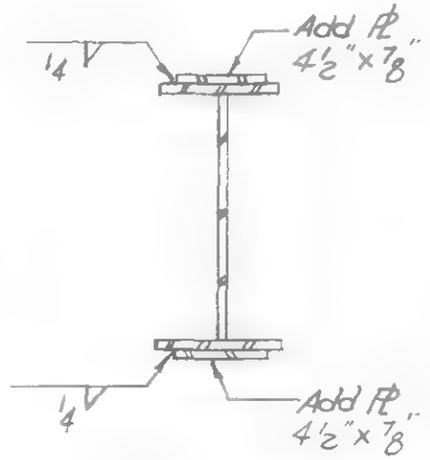

Det C

LICENSED PROFESSIONAL ENGINEER
LESLIE E. ROBERTSON
No. 34360
UNIVERSITY OF THE STATE OF NEW YORK

DESIGNED
DRAWN
REVIEWED

20-AB-8

SKILLING, HELLE, CHRISTIANSEN, ROBERTSON — Structural & Civil Engineers

PROJECT THE WORLD TRADE CENTER | TITLE STRUCTURAL STEEL - DETAIL 8 | DATE 9-5-68

REVISIONS

-9-68

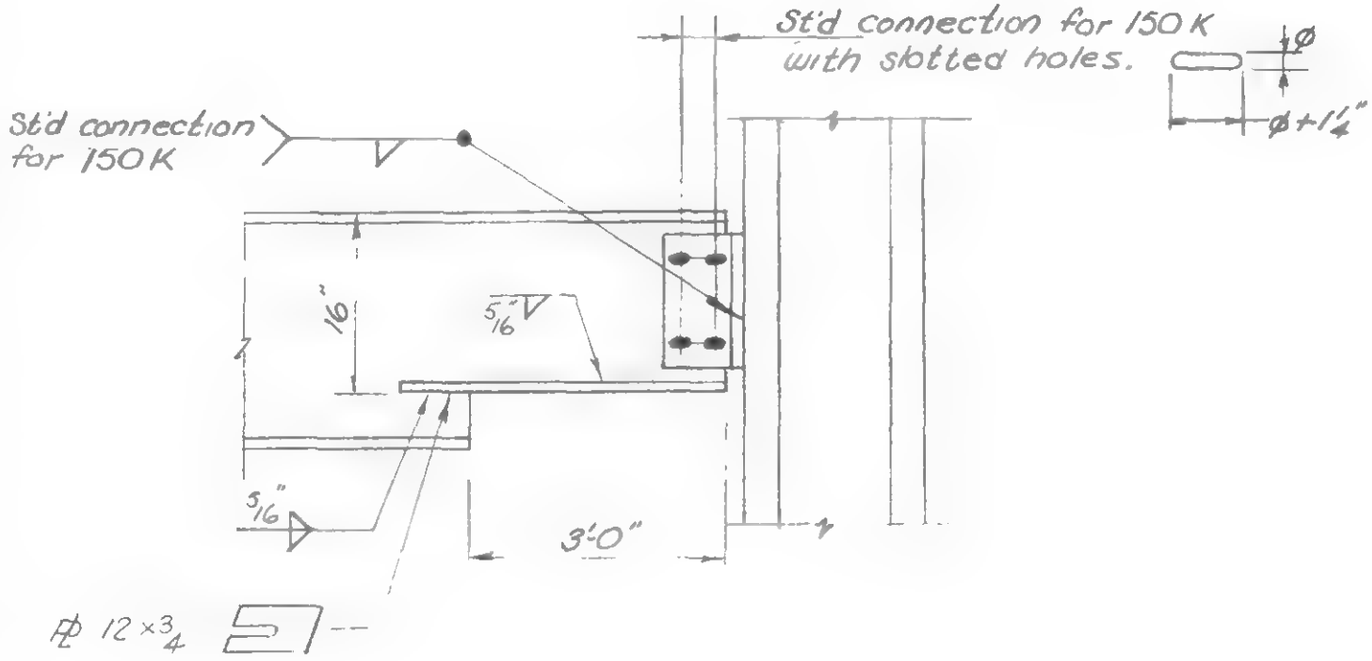

DETAIL D

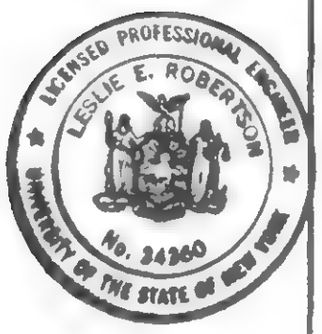

DESIGNED

DRAWN

REVIEWED

20-AB-8.1

SKILLING, HELLE, CHRISTIANSEN, ROBERTSON — Structural & Civil Engineers

PROJECT THE WORLD TRADE CENTER | TITLE STRUCTURAL STEEL - DETAIL 9 | DATE 9-5-68

REVISIONS

1-9-68

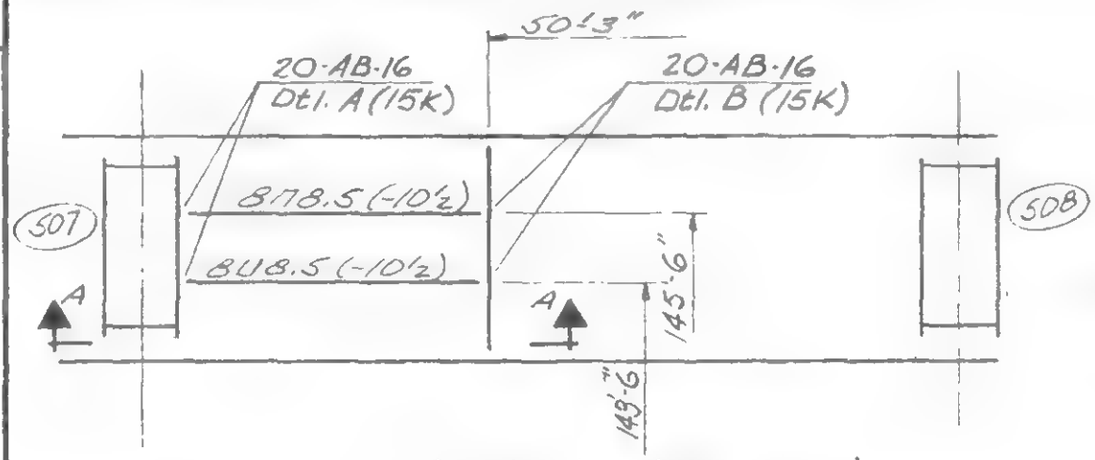

PLAN (Floor 9)

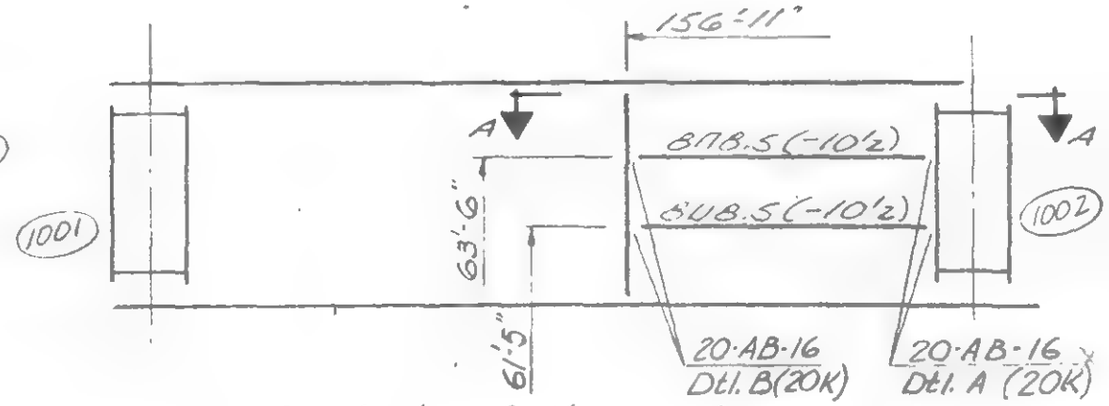

PLAN (Floor 9)

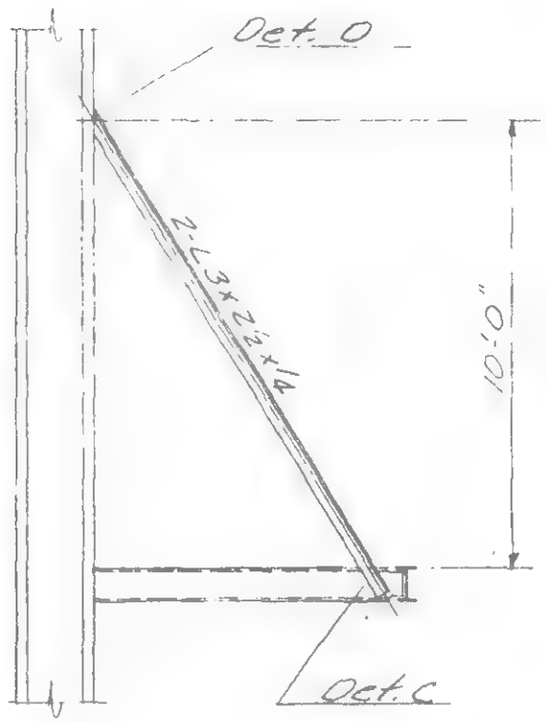

Section A-A

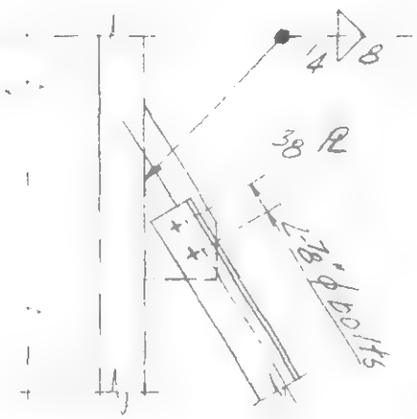

Det. D

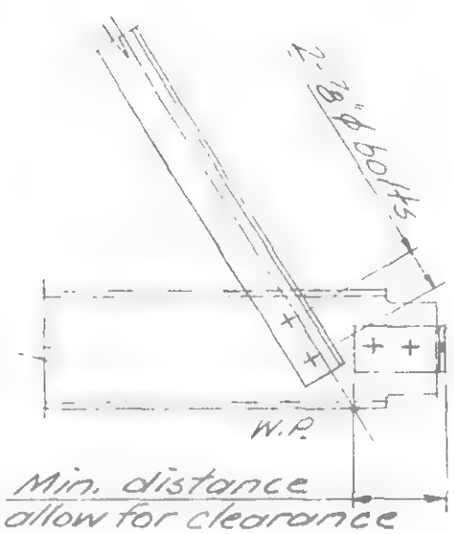

Det. C

Note
See Dwg SA-17 for members & member sizes not shown.

LICENSED PROFESSIONAL ENGINEER — LESLIE E. ROBERTSON — No. 34360 — UNIVERSITY OF THE STATE OF NEW YORK

DESIGNED

DRAWN

REVIEWED

20-A-9

SKILLING, HELLE, CHRISTIANSEN, ROBERTSON — Structural & Civil Engineers

PROJECT THE WORLD TRADE CENTER | TITLE STRUCTURAL STEEL - DETAIL 10 | DATE 9-5-68

REVISIONS

1 9-68

6-24-69

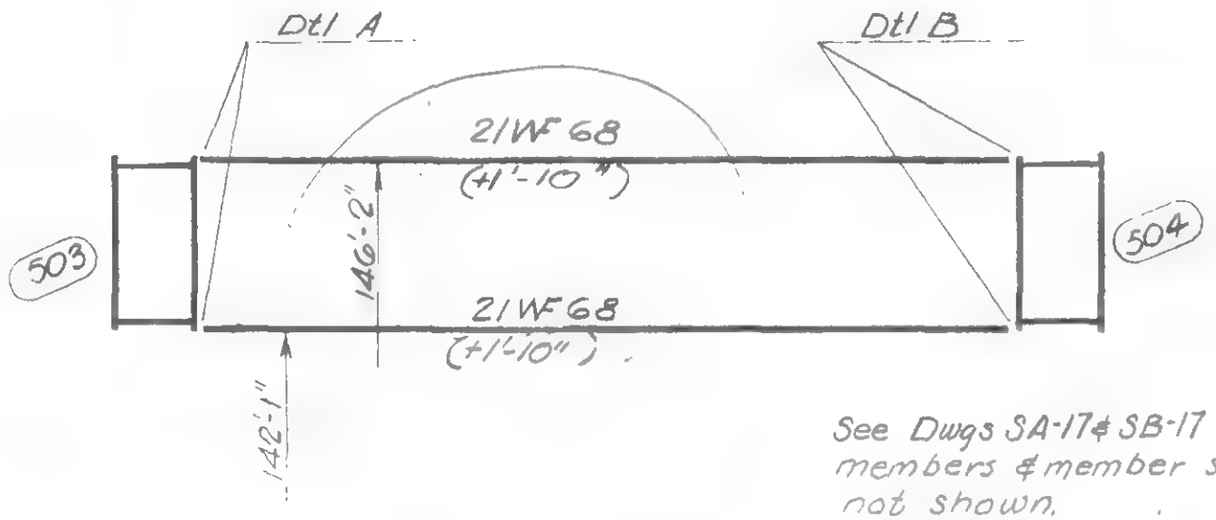

See Dwgs SA-17 & SB-17 for members & member sizes not shown.

PLAN (Floor 9)

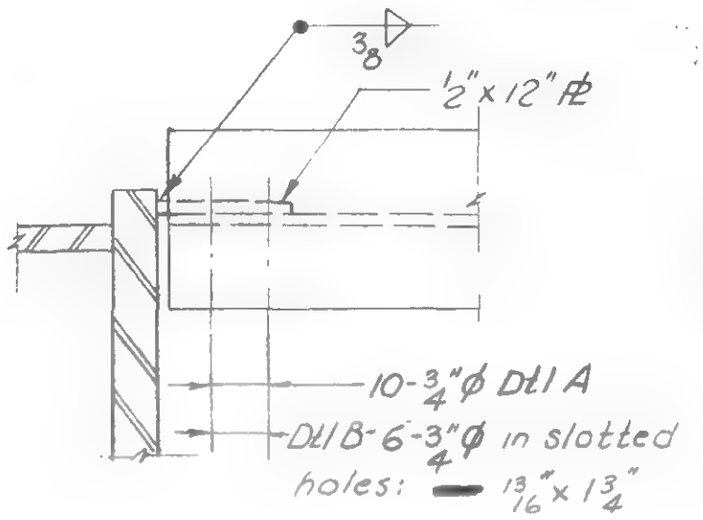

Details A & B

LICENSED PROFESSIONAL ENGINEER
UNIVERSITY OF THE STATE OF NEW YORK

DESIGNED

DRAWN

REVIEWED

20-AB-10

SKILLING, HELLE, CHRISTIANSEN, ROBERTSON — Structural & Civil Engineers

PROJECT THE WORLD TRADE CENTER | TITLE STRUCTURAL STEEL - DETAIL II | DATE 9-5-68

REVISIONS

-9-68

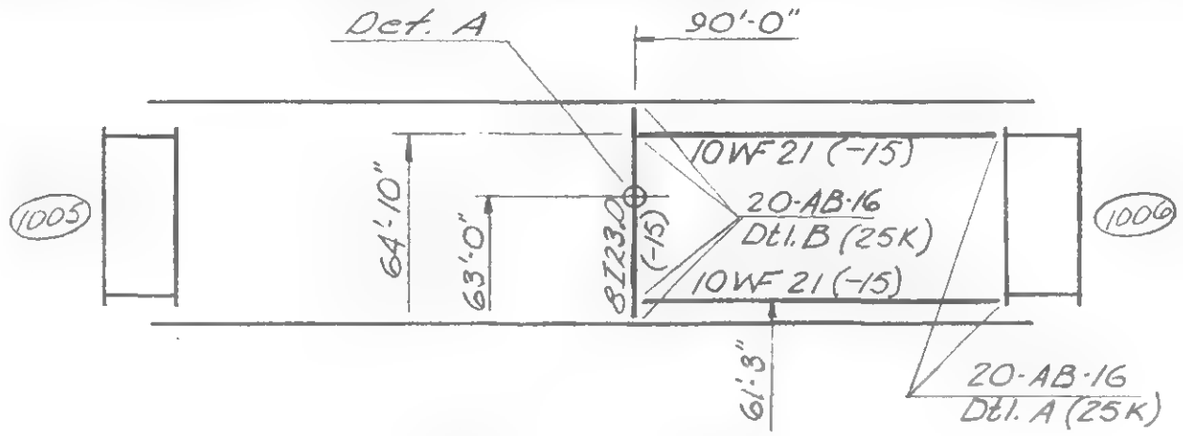

PLAN El. 264

See Dwg SB-4 for members & member sizes not shown.

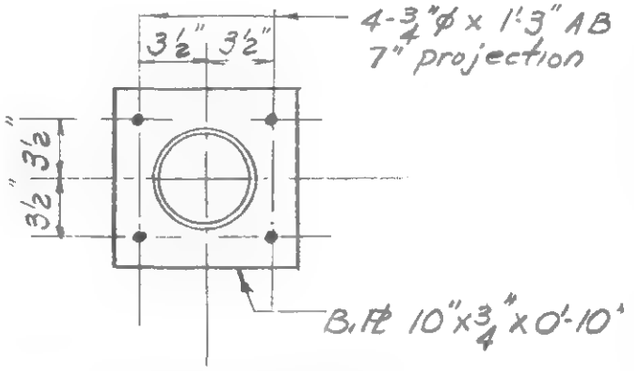

Section aa

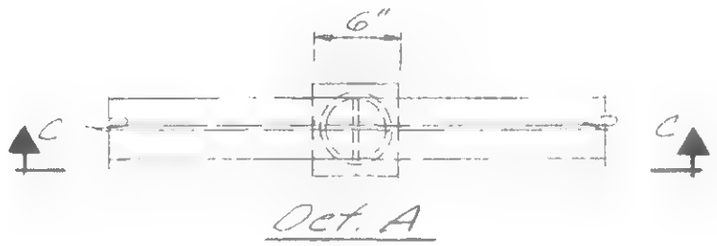

Det. A

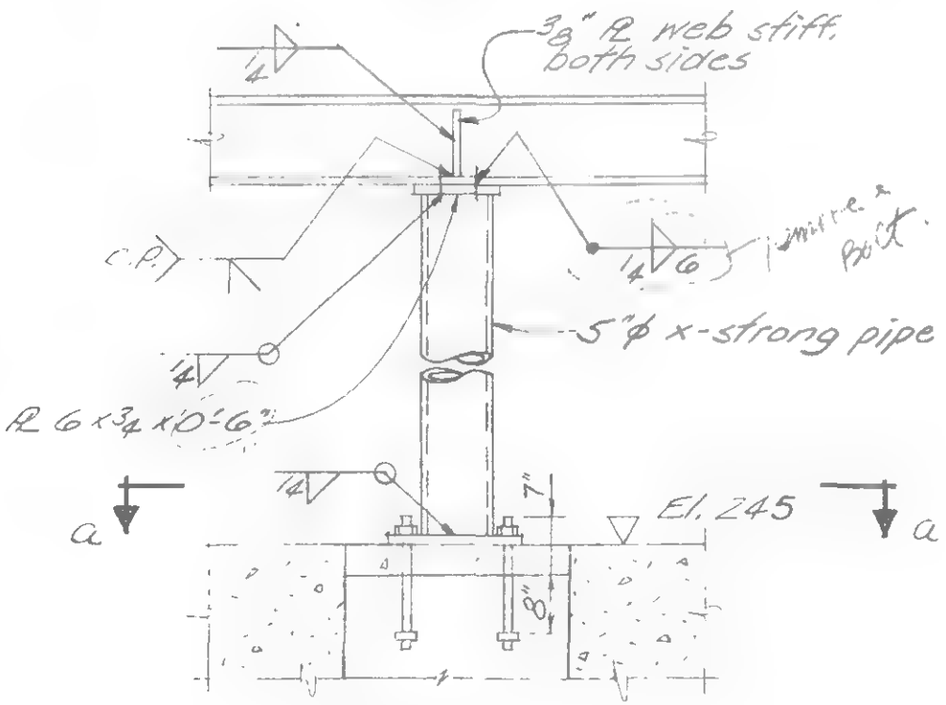

Section c-c

DESIGNED

DRAWN

REVIEWED

20-B-11

SKILLING HELLE CHRISTIANSEN ROBERTSON — Structural & Civil Engineers

PROJECT THE WORLD TRADE CENTER | TITLE STRUCTURAL STEEL - DETAIL 12 | DATE 9-5-68

REVISIONS

-9-68

See Dwg SB-17 for members & member sizes not shown.

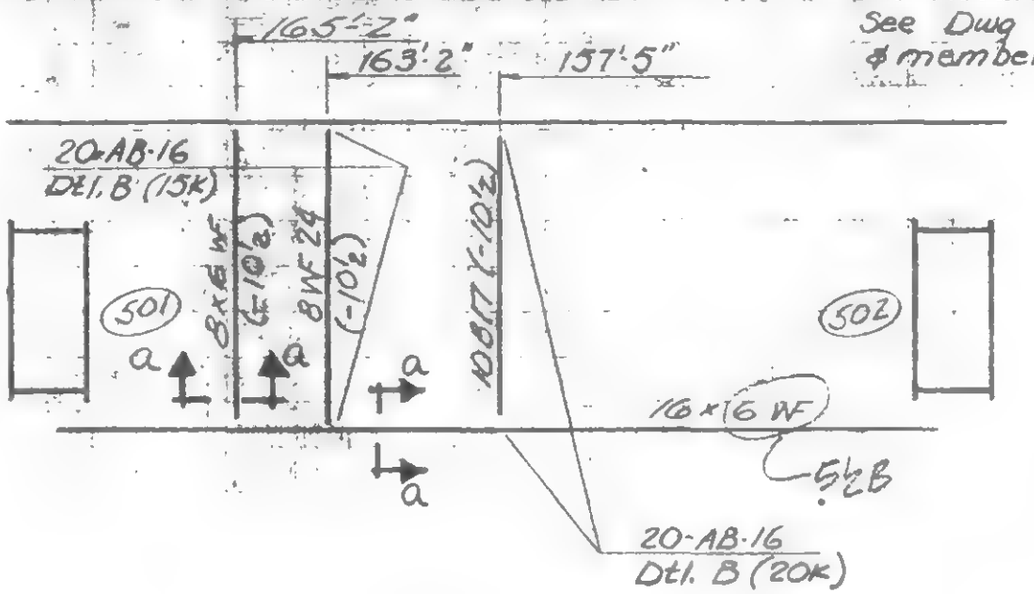

PLAN (Floor 9)

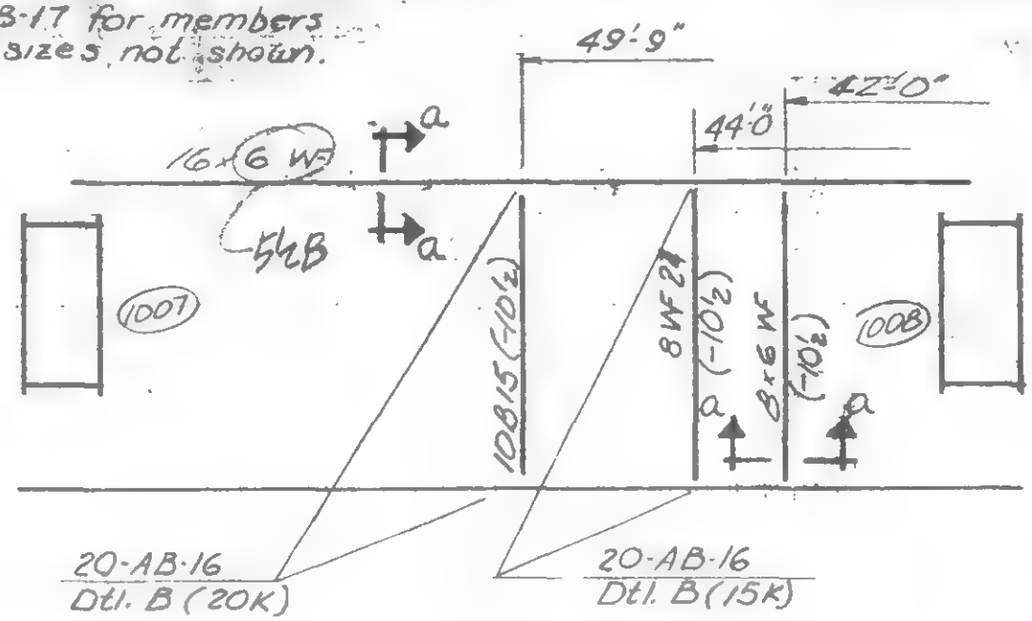

PLAN (Floor 9)

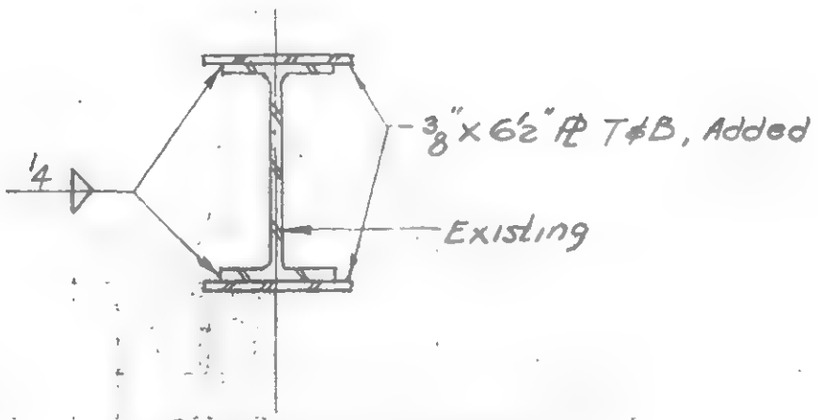

Section aa

LICENSED PROFESSIONAL ENGINEER — LESLIE E. ROBERTSON — No. 34360 — UNIVERSITY OF THE STATE OF NEW YORK

DESIGNED

DRAWN

REVIEWED

20-B-12

SKILLING, HELLE, CHRISTIANSEN, ROBERTSON — Structural & Civil Engineers

PROJECT THE WORLD TRADE CENTER | TITLE STRUCTURAL STEEL - DETAIL 13 | DATE 9-5-68

REVISIONS

·9-68

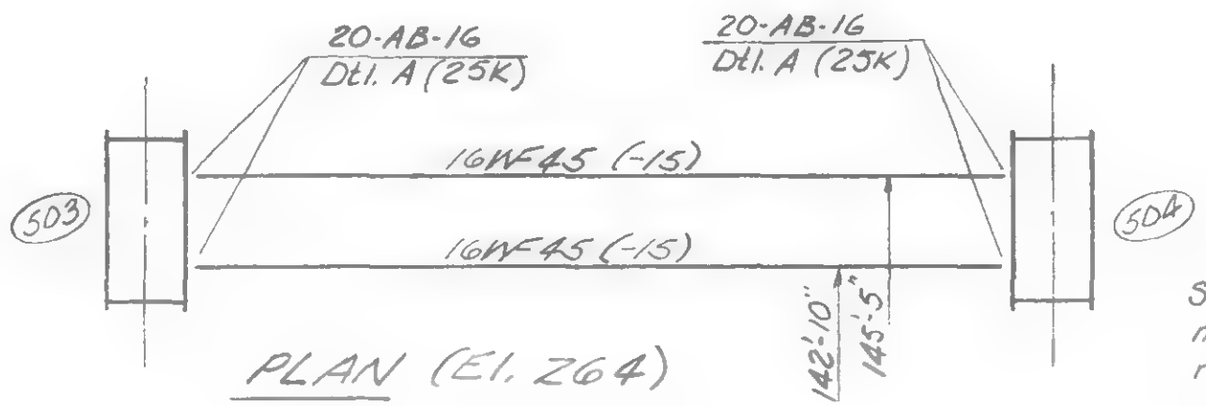

PLAN (El. 264)

See Dwgs SA-4 & SB-4 for members & member sizes not given.

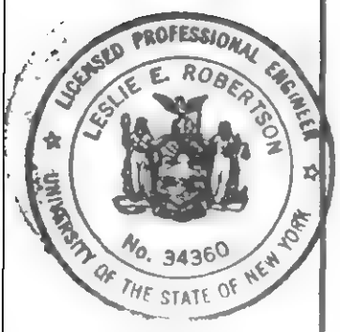

DESIGNED

DRAWN

REVIEWED

20-AB-13

SKILLING - HELLE - CHRISTIANSEN - ROBERTSON Structural & Civil Engineers

PROJECT THE WORLD TRADE CENTER | TITLE STRUCTURAL STEEL & FOUNDATION - DETAIL 14 | DATE 8-19-68

REVISIONS

9-5-68
10-9-68

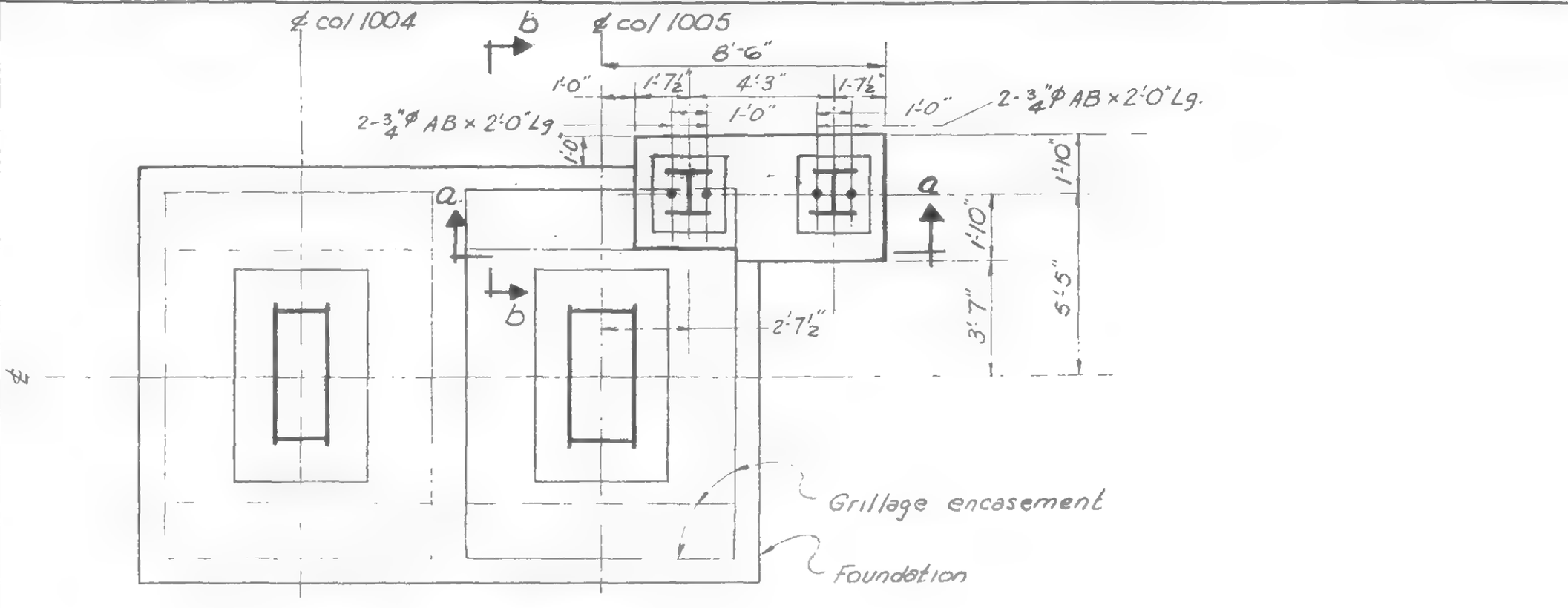

PLAN - SECTION C-C

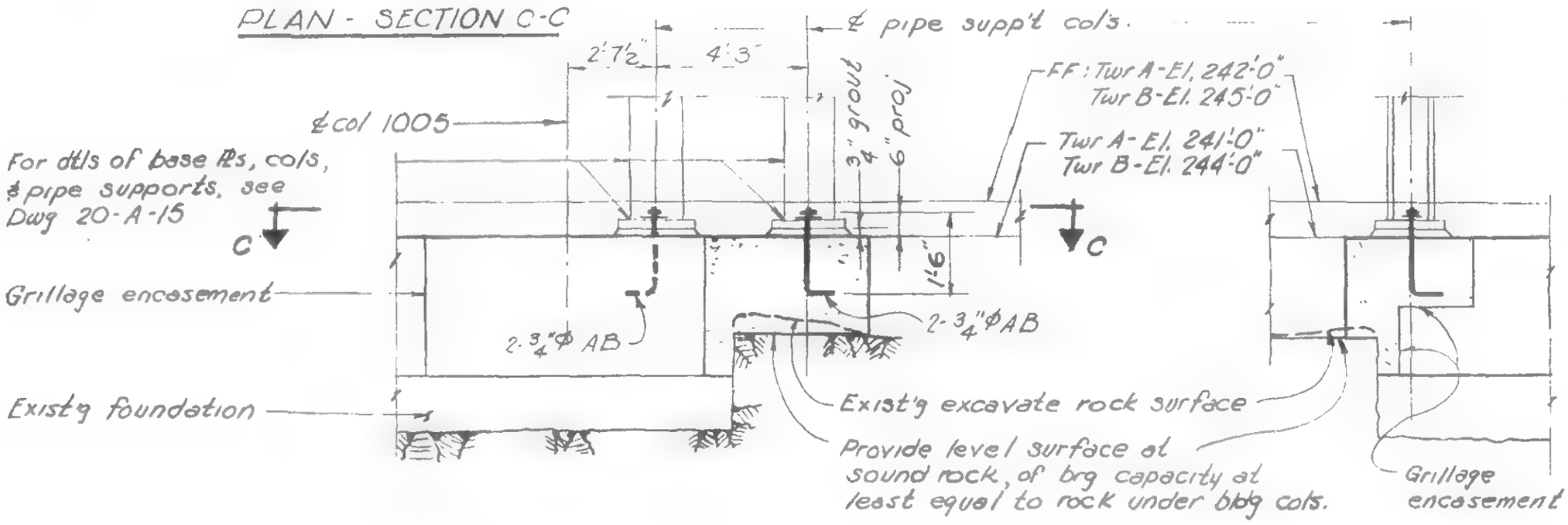

SECTION a-a

SECTION b-b

LICENSED PROFESSIONAL ENGINEER
LESLIE E. ROBERTSON
No. 34360
UNIVERSITY OF THE STATE OF NEW YORK

20-AB-14

SKILLING, HELLE, CHRISTIANSEN, ROBERTSON — Structural & Civil Engineers

PROJECT THE WORLD TRADE CENTER | TITLE STRUCTURAL STEEL - DETAIL 15 | DATE 9-5-68

REVISIONS

10-9-68
11-20-68
1-31-69
3-12-71

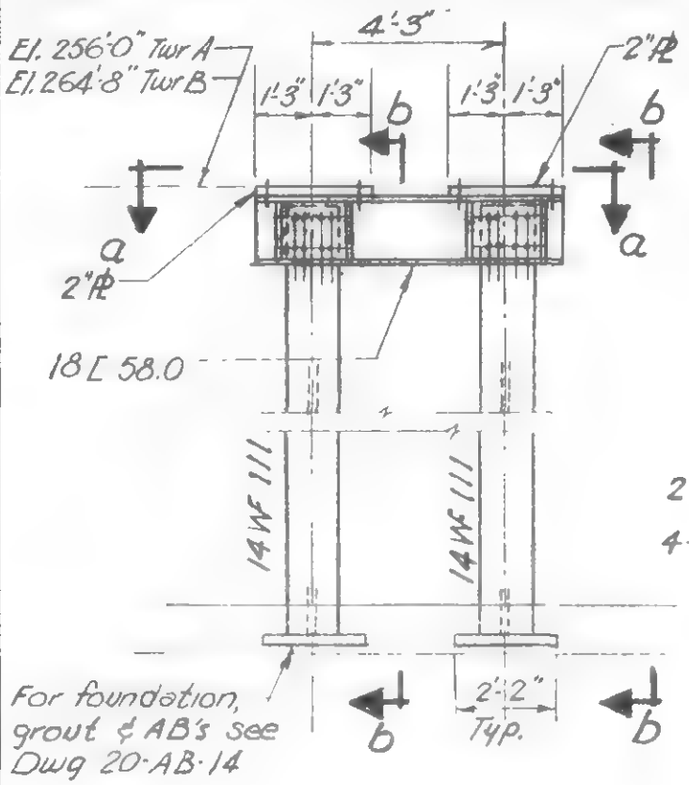

ELEVATION

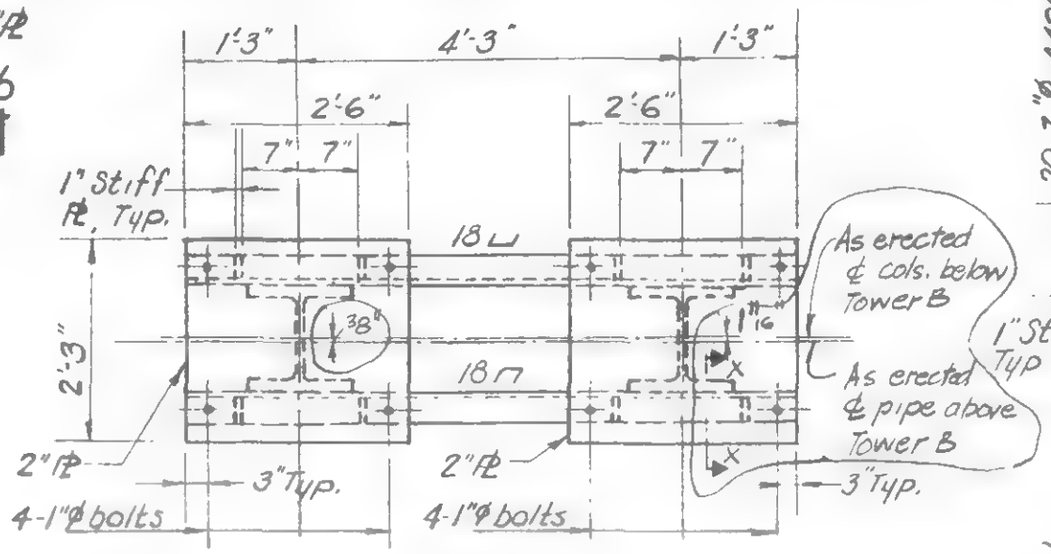

Section aa

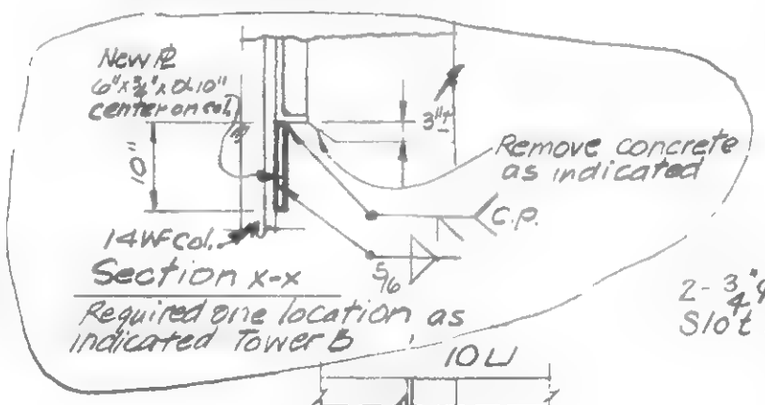

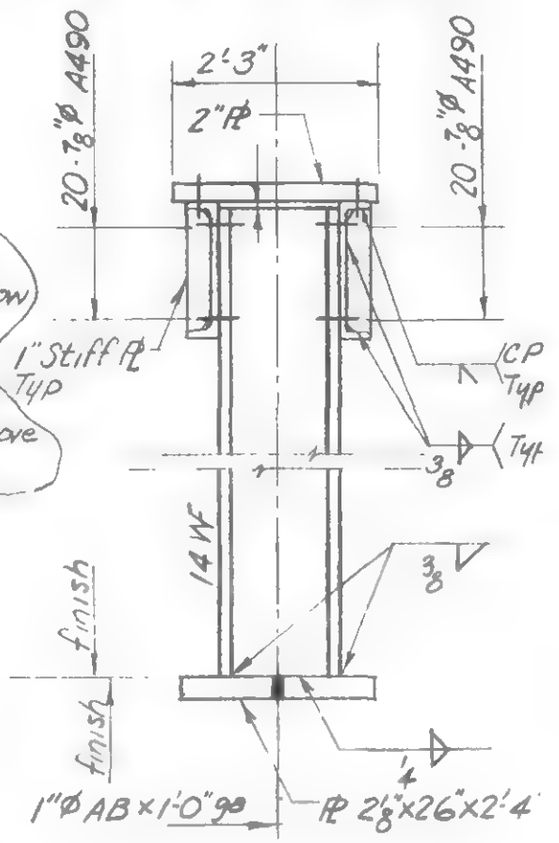

Section bb

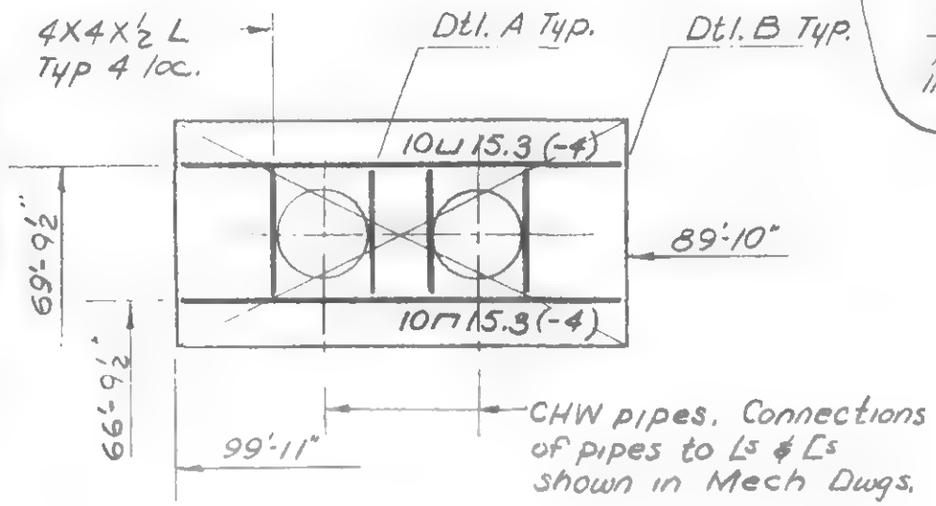

PLAN AT ELEV. 264 - TOWER A

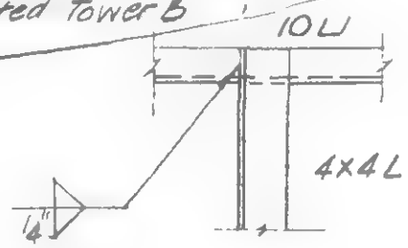

Detail A

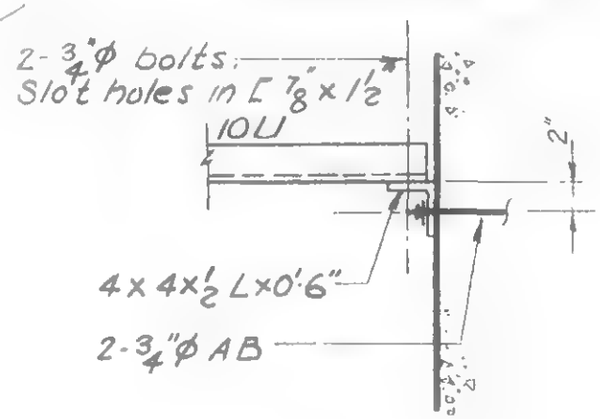

Detail B

LICENSED PROFESSIONAL ENGINEER — LESLIE E. ROBERTSON — No. 34360 — STATE OF NEW YORK

DRAWN

REVIEWED

20-AB-15

SKILLING, HELLE, CHRISTIANSEN, ROBERTSON — Structural & Civil Engineers

PROJECT: THE WORLD TRADE CENTER | TITLE: STRUCTURAL STEEL & CONNECTION DETAILS | DATE: 9-5-68

REVISIONS
27-68
10-9-68

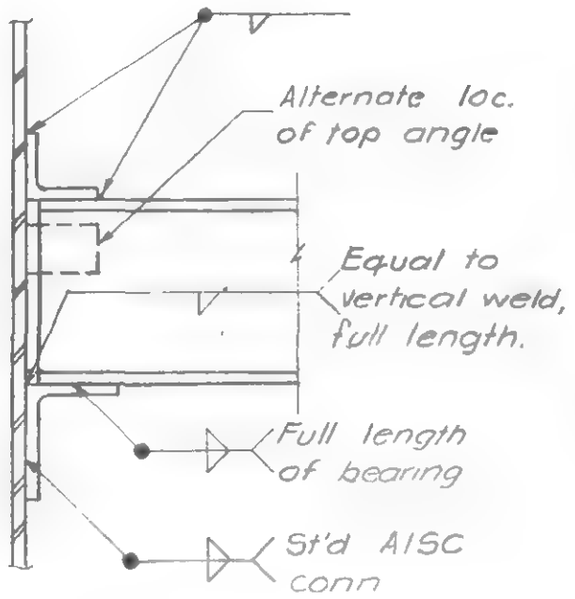

DETAIL A
Unstiffened seat

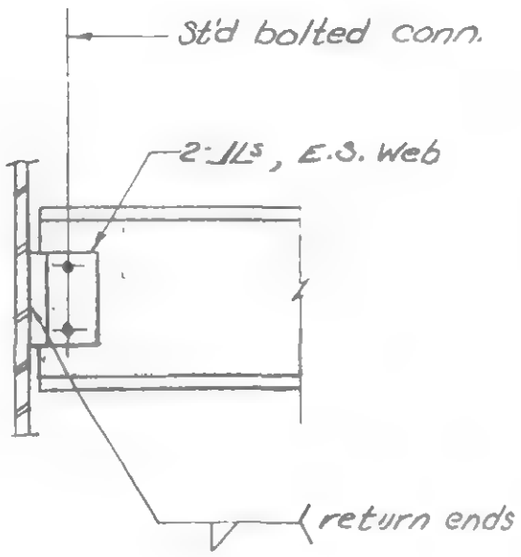

DETAIL B

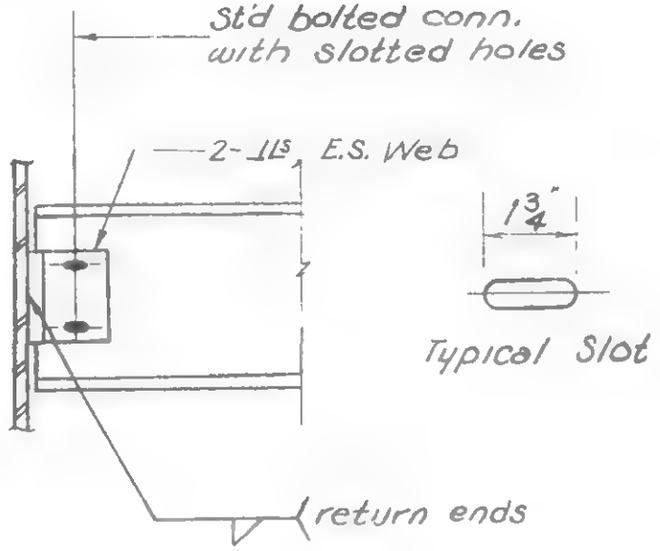

DETAIL C

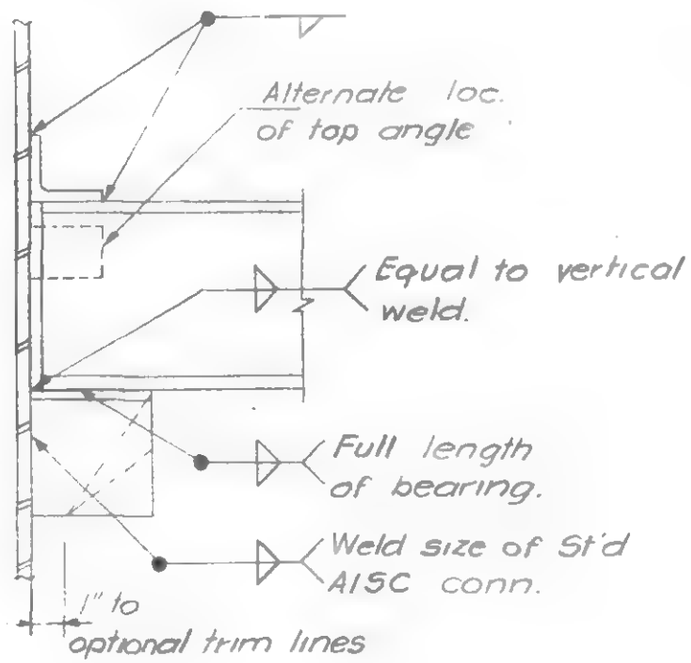

DETAIL A
Stiffened seat

Notes.

1. All connections are standard AISC connections for the reactions shown in Plans & Details of Book 20, or in Structural Steel Plans, except as noted.

2. Cope beam flanges where required.

LICENSED PROFESSIONAL ENGINEER — LESLIE E. ROBERTSON — No. 34360 — UNIVERSITY OF THE STATE OF NEW YORK

DESIGNED
DRAWN
REVIEWED

20-AB-16

SKILLING, HELLE, CHRISTIANSEN, ROBERTSON — Structural & Civil Engineers

PROJECT: THE WORLD TRADE CENTER | TITLE: STRUCTURAL STEEL - DETAIL 20 | DATE: 10-9-68

REVISIONS
11-22-68
3-21-69

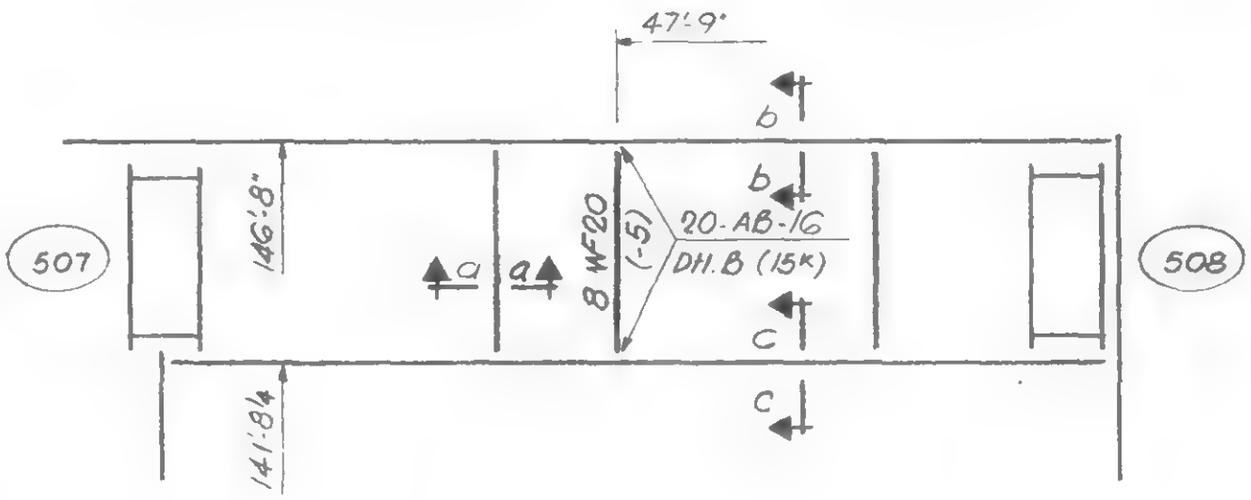

Plan - Floor 25, 59

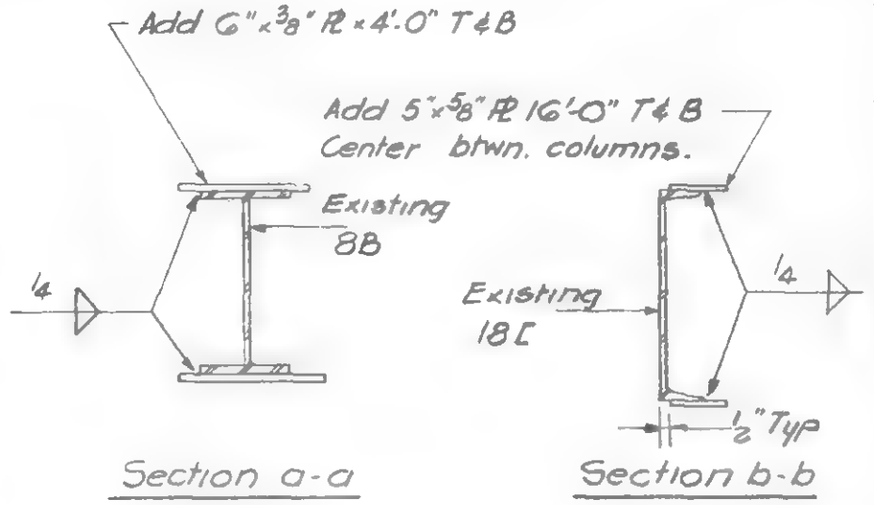

Section a-a — Section b-b

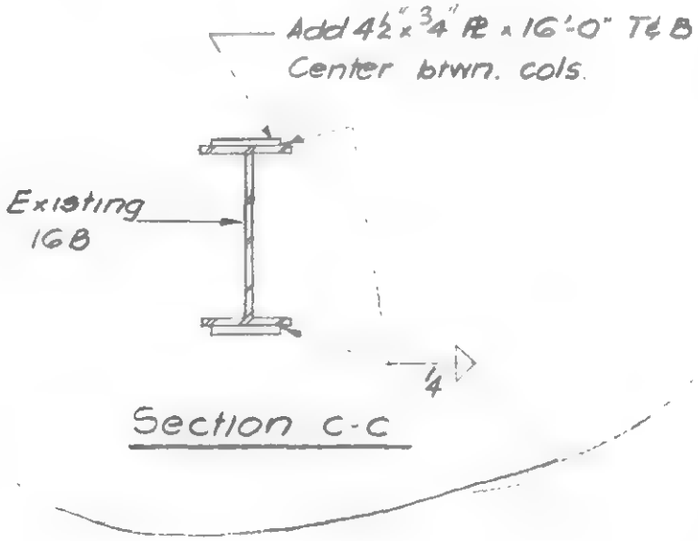

Section c-c

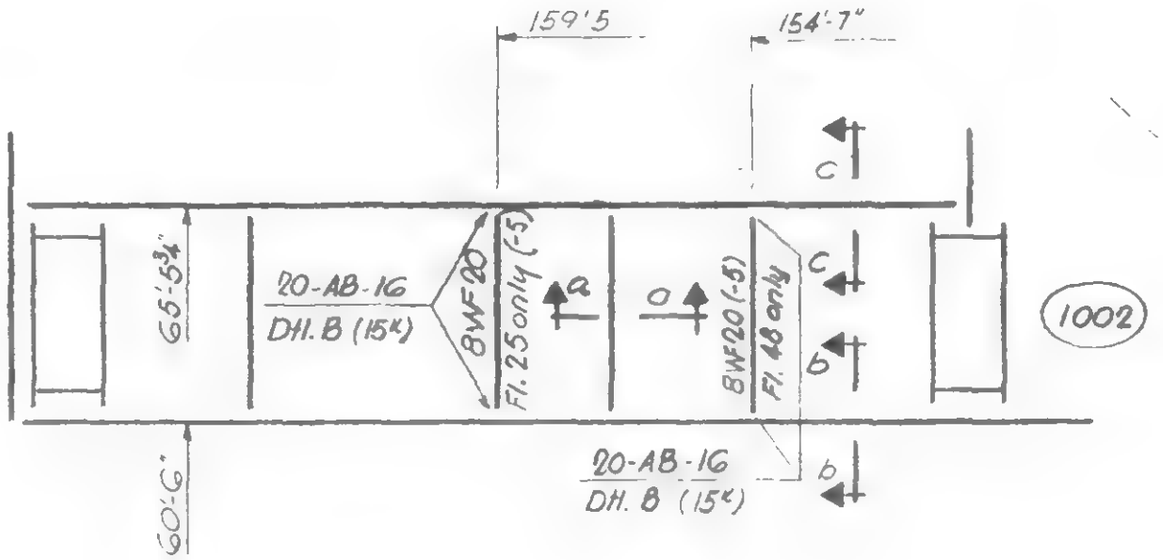

Plan - Floor 25, 48

See Structural Steel Drawings for members and member sizes not shown.

LICENSED PROFESSIONAL ENGINEER — LESKIE E. ROBERTSON — No. 34360 — UNIVERSITY OF THE STATE OF NEW YORK

DESIGNED

DRAWN
G. T. H.

REVIEWED

Official Copy of 3/21/69 issue

20-A-20

SKILLING, HELLE, CHRISTIANSEN, ROBERTSON — Structural & Civil Engineers

PROJECT: THE WORLD TRADE CENTER | TITLE: STRUCTURAL STEEL - DETAIL 21 | DATE: 10-9-68

REVISIONS

-22-68

3-21-69

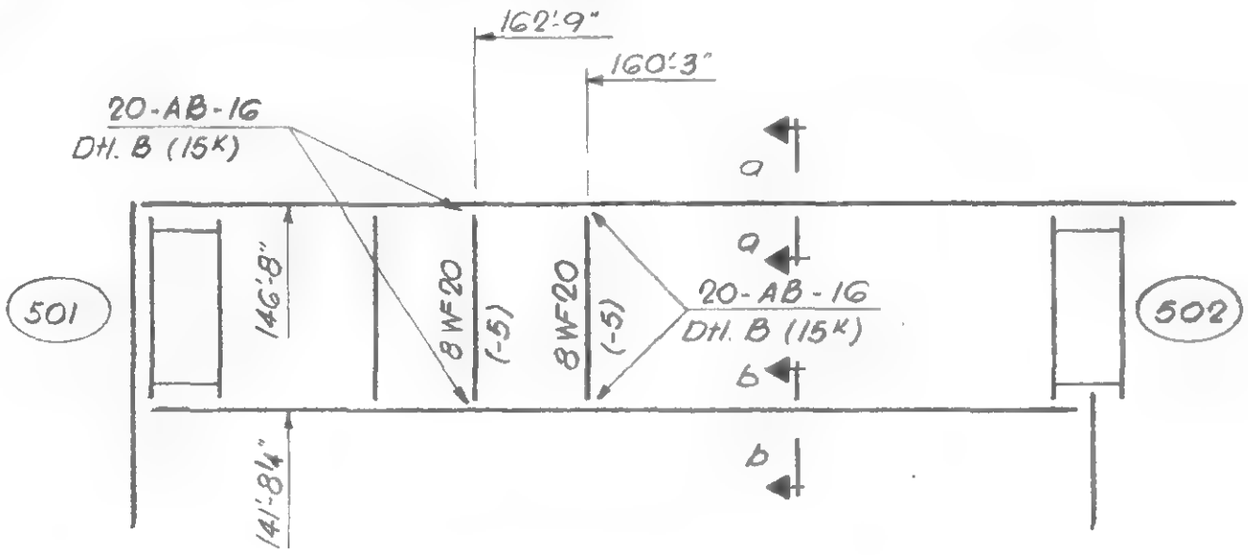

Plan - Floors 25, 59

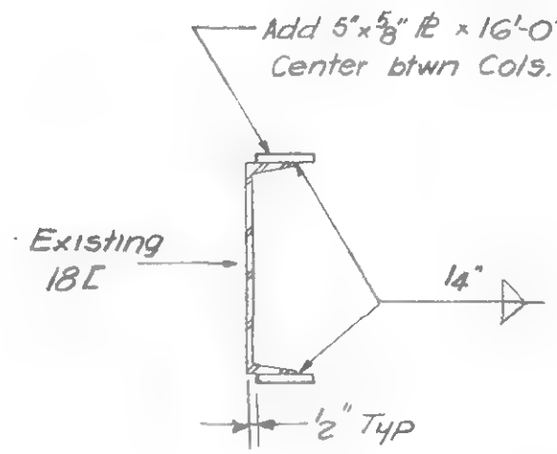

Section a-a

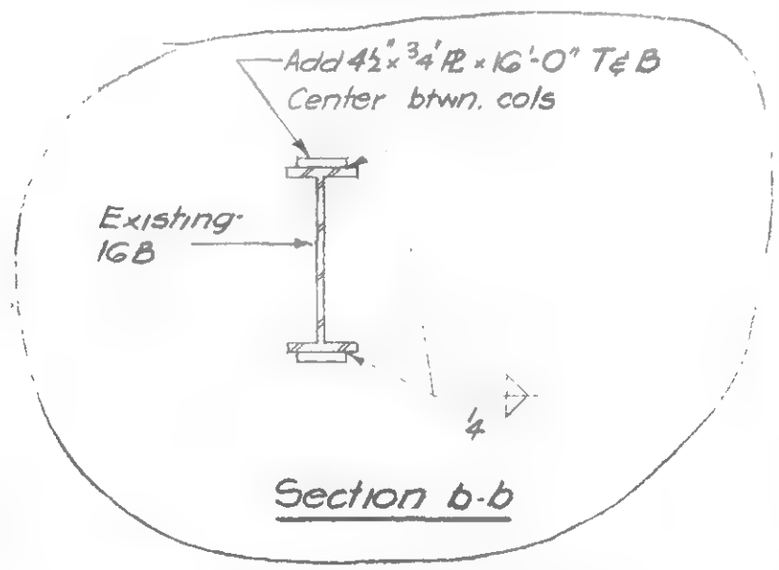

Section b-b

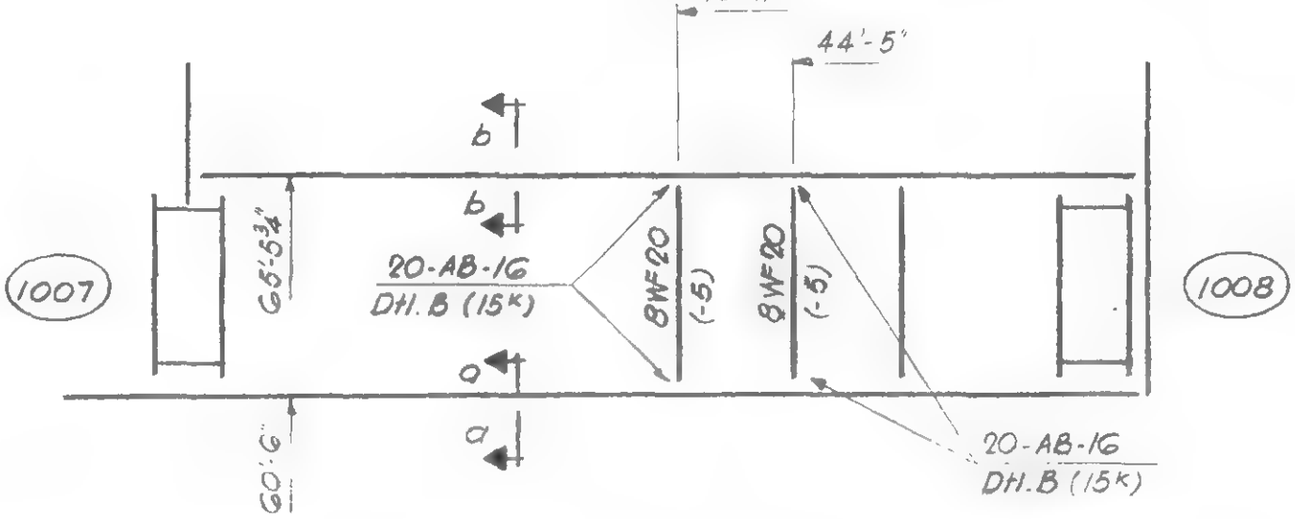

Plan - Floor 25

See Structural Steel Drawings for members and member sizes not shown.

LICENSED PROFESSIONAL ENGINEER
LESLIE E. ROBERTSON
No. 34360
UNIVERSITY OF THE STATE OF NEW YORK

DESIGNED

DRAWN
G.T.H

REVIEWED

Official copy of 3/21/69 issue

20-B-21

SKILLING, HELLE, CHRISTIANSEN, ROBERTSON — Structural & Civil Engineers

PROJECT THE WORLD TRADE CENTER | TITLE STRUCTURAL STEEL - DETAIL 50 | DATE 9-25-68

REVISIONS

1- -9-68

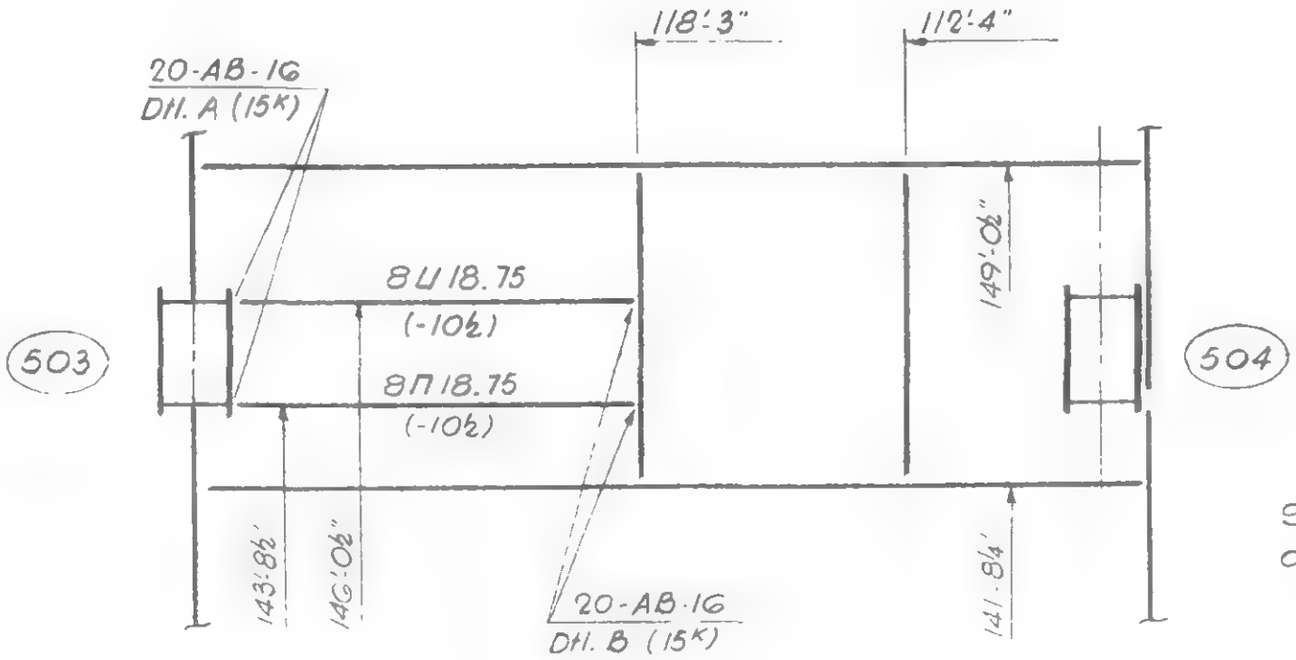

See Dwgs. SA-83 and SB-83 for members and member sizes not shown.

Plan - Floor 75

LICENSED PROFESSIONAL ENGINEER
LESLIE E. ROBERTSON
No. 34360
UNIVERSITY OF THE STATE OF NEW YORK

DESIGNED

DRAWN
G.T.H.

REVIEWED

20-AB-50

SKILLING, HELLE, CHRISTIANSEN, ROBERTSON — Structural & Civil Engineers

PROJECT THE WORLD TRADE CENTER | TITLE STRUCTURAL STEEL - DETAIL 51 | DATE 9-25-68

REVISIONS

-9-68

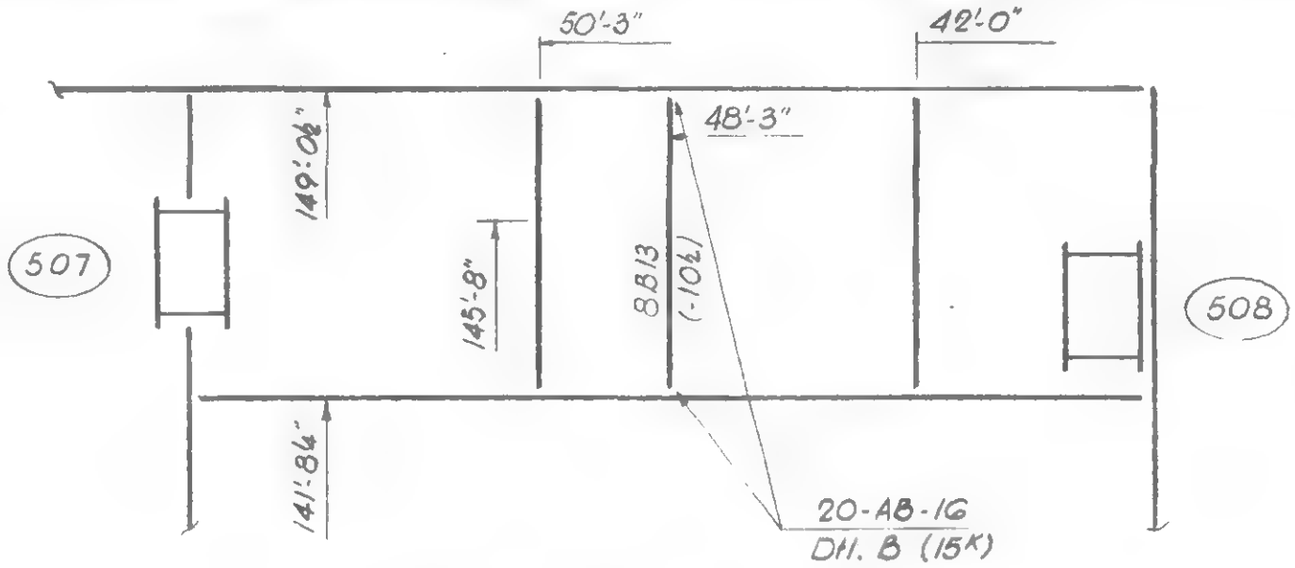

Plan - Floor 75

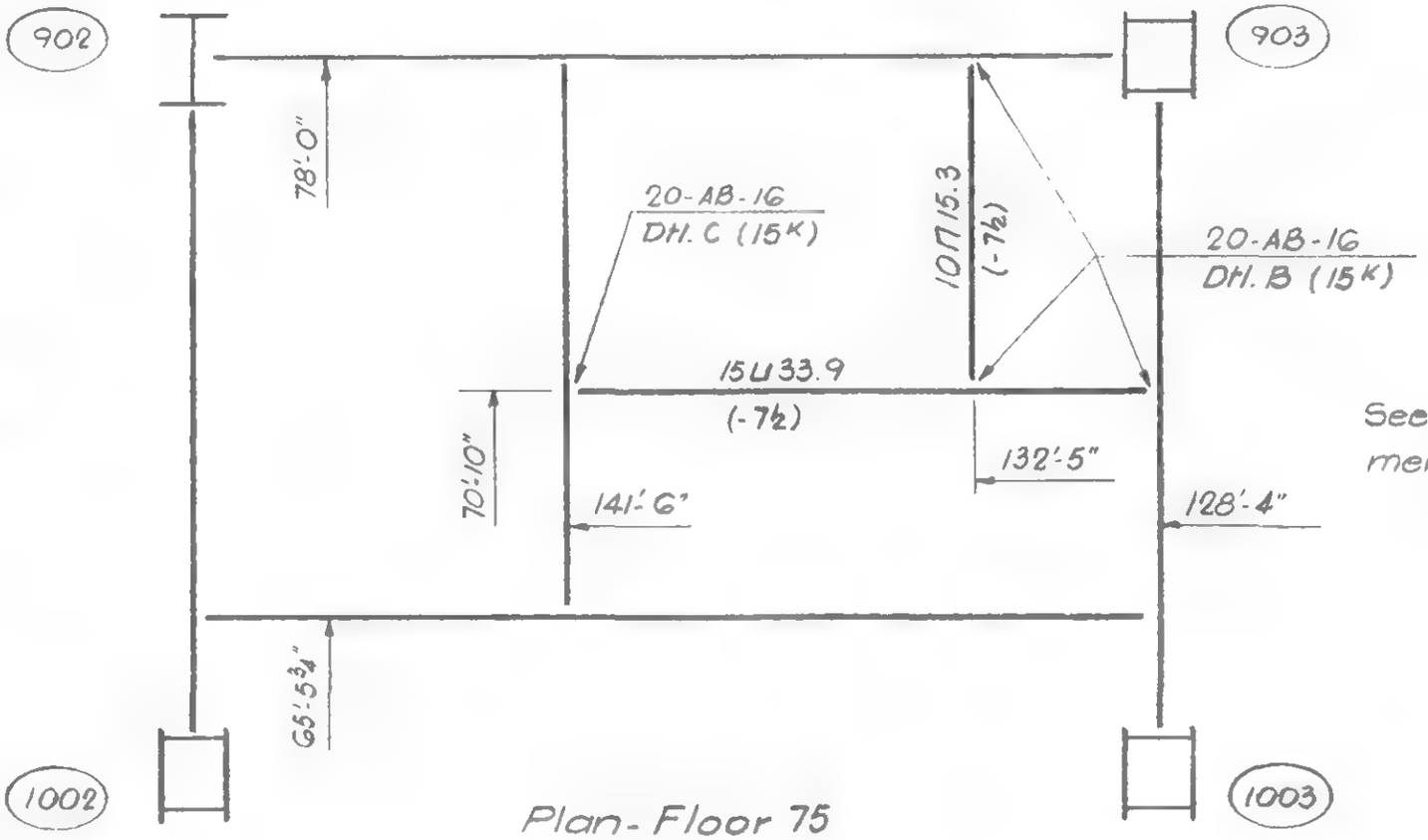

Plan - Floor 75

See Dwg. SA-83 for members and member sizes not shown.

LICENSED PROFESSIONAL ENGINEER — LESLIE E. ROBERTSON — No. 34360 — UNIVERSITY OF THE STATE OF NEW YORK

DESIGNED

DRAWN G.T.H.

REVIEWED

20-A-51

SKILLING, HELLE, CHRISTIANSEN, ROBERTSON — Structural & Civil Engineers

PROJECT THE WORLD TRADE CENTER | TITLE STRUCTURAL STEEL - DETAIL 53 | DATE 9-25-68

REVISIONS

9-68

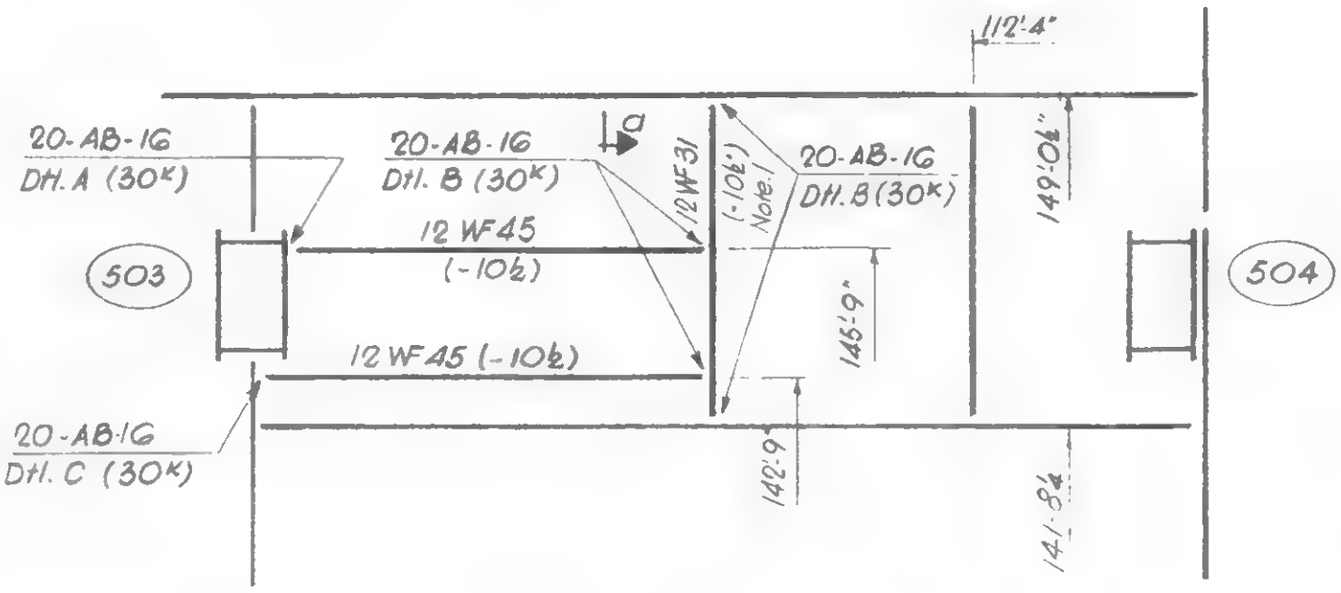

Plan - Floor 77

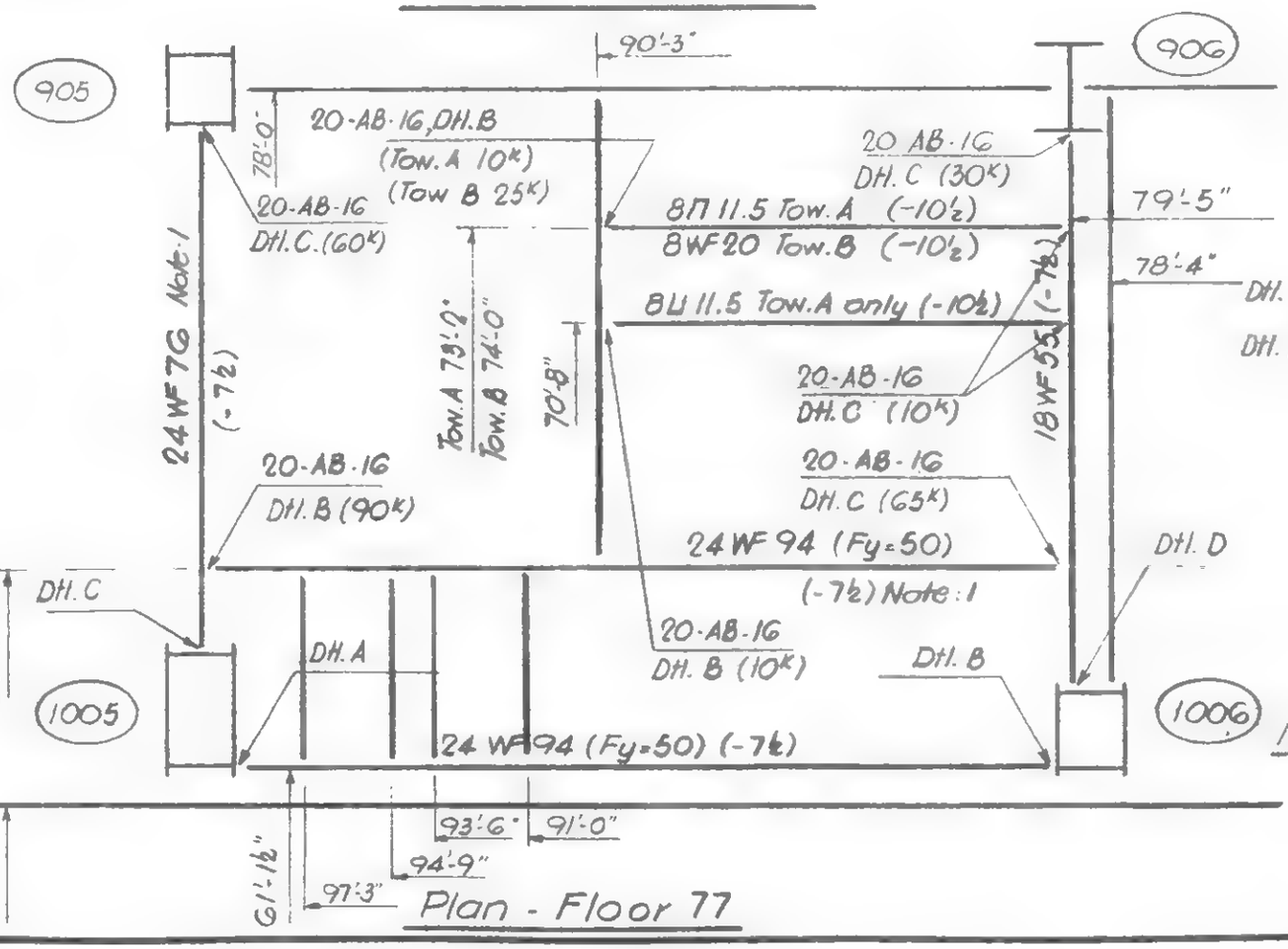

Plan - Floor 77

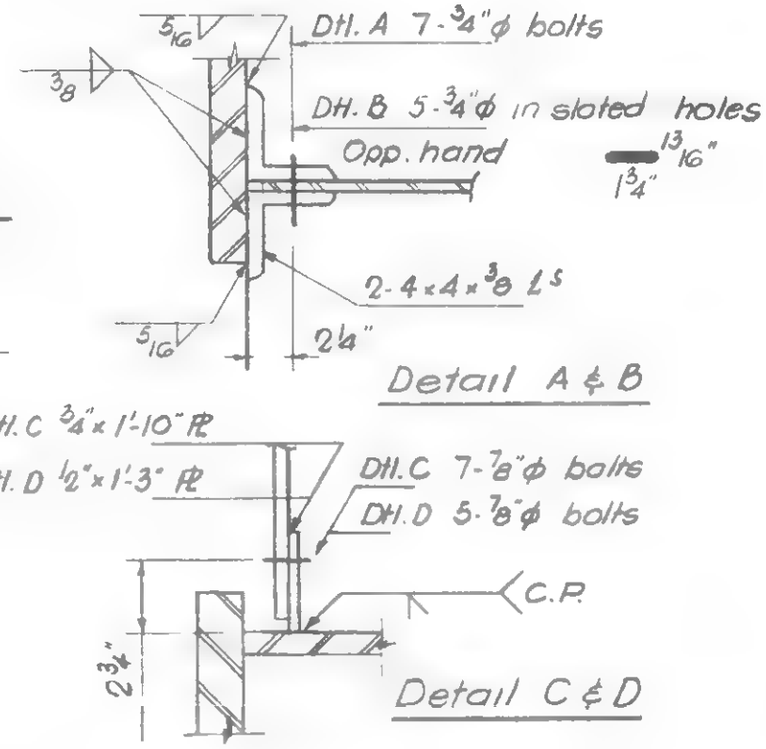

Note.

1. Delete member previously shown at this location on Dwgs SA-85 and SB-85
2. See Dwgs. SA-85 and SB-85 for members and member sizes not shown.

LICENSED PROFESSIONAL ENGINEER — LESLIE E. ROBERTSON — No. 34360 — UNIVERSITY OF THE STATE OF NEW YORK

DESIGNED

DRAWN

REVIEWED

20-AB-53

SKILLING, HELLE, CHRISTIANSEN, ROBERTSON — Structural & Civil Engineers

PROJECT THE WORLD TRADE CENTER | TITLE STRUCTURAL STEEL - DETAIL 54 | DATE 9-25-68

REVISIONS

1-9-68

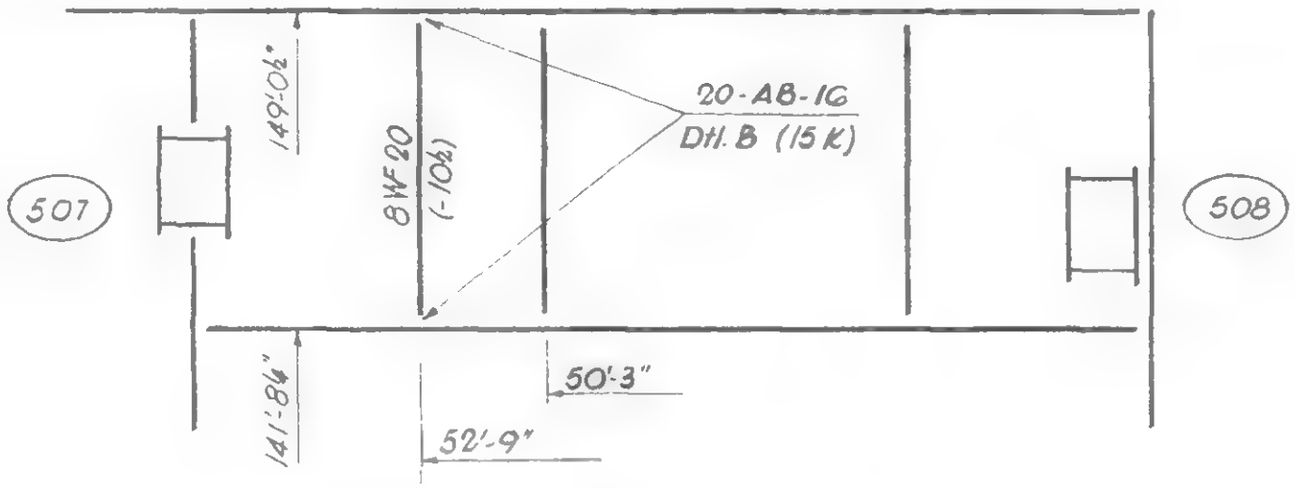

Plan - Floor 77

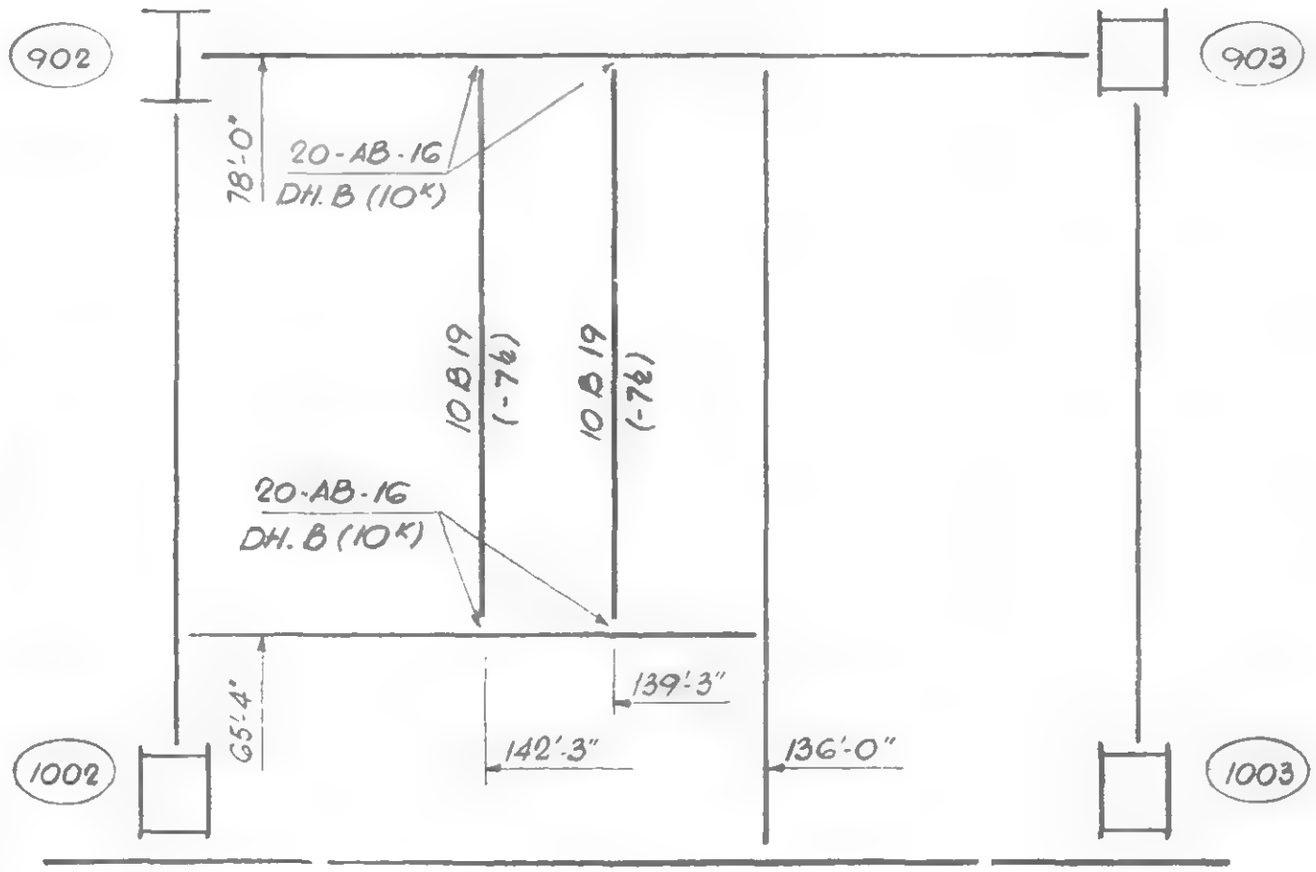

Plan - Floor 77

See Dwg. SA-85 for members and member sizes not shown.

LICENSED PROFESSIONAL ENGINEER — LESLIE E. ROBERTSON — No. 34360 — UNIVERSITY OF THE STATE OF NEW YORK

DESIGNED

DRAWN

G.T.H.

REVIEWED

20-A-54

SKILLING, HELLE, CHRISTIANSEN, ROBERTSON — Structural & Civil Engineers

PROJECT: THE WORLD TRADE CENTER | TITLE: STRUCTURAL STEEL - DETAIL 55 | DATE: 11-27-68

REVISIONS

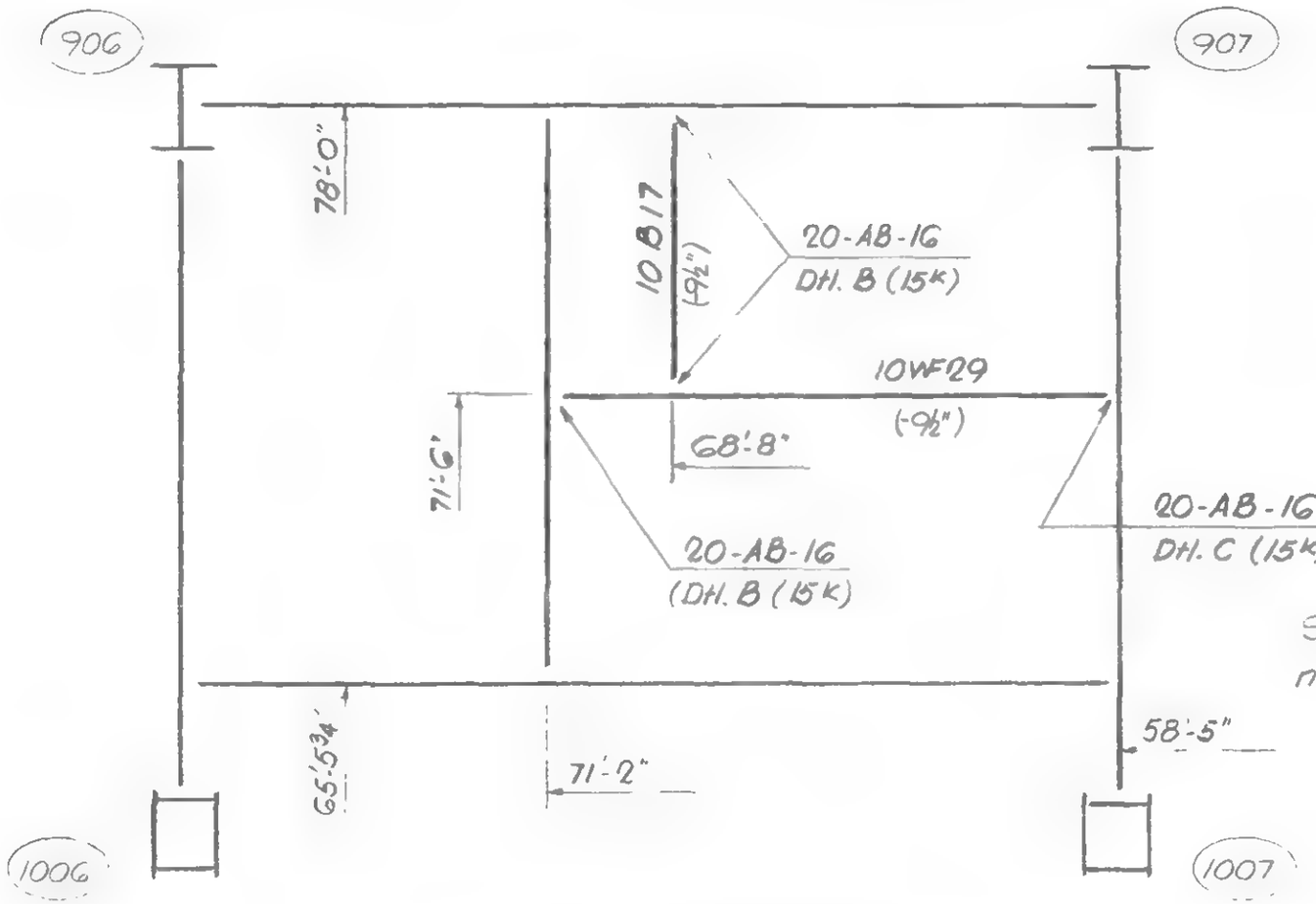

Plan - Floor 75

See Dwg. SB-83 for members and member size not shown.

LICENSED PROFESSIONAL ENGINEER
LESLIE E ROBERTSON
No 34360
UNIVERSITY OF THE STATE OF NEW YORK

DESIGNED

DRAWN
G.T.H.

REVIEWED

20-B-55

SKILLING, HELLE, CHRISTIANSEN, ROBERTSON — Structural & Civil Engineers

PROJECT: THE WORLD TRADE CENTER

TITLE: STRUCTURAL STEEL - DETAIL 60

DATE: 9-27-68

REVISIONS

1-9-68

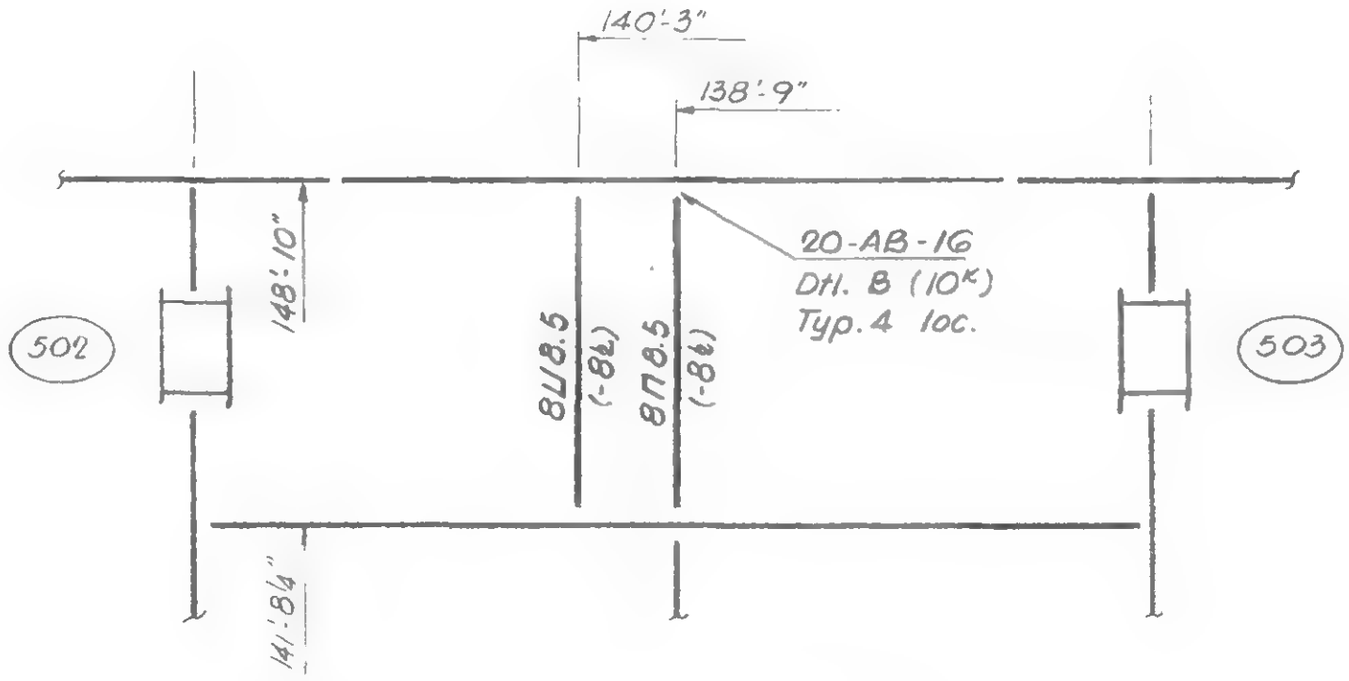

Plan - Floors 78, 82

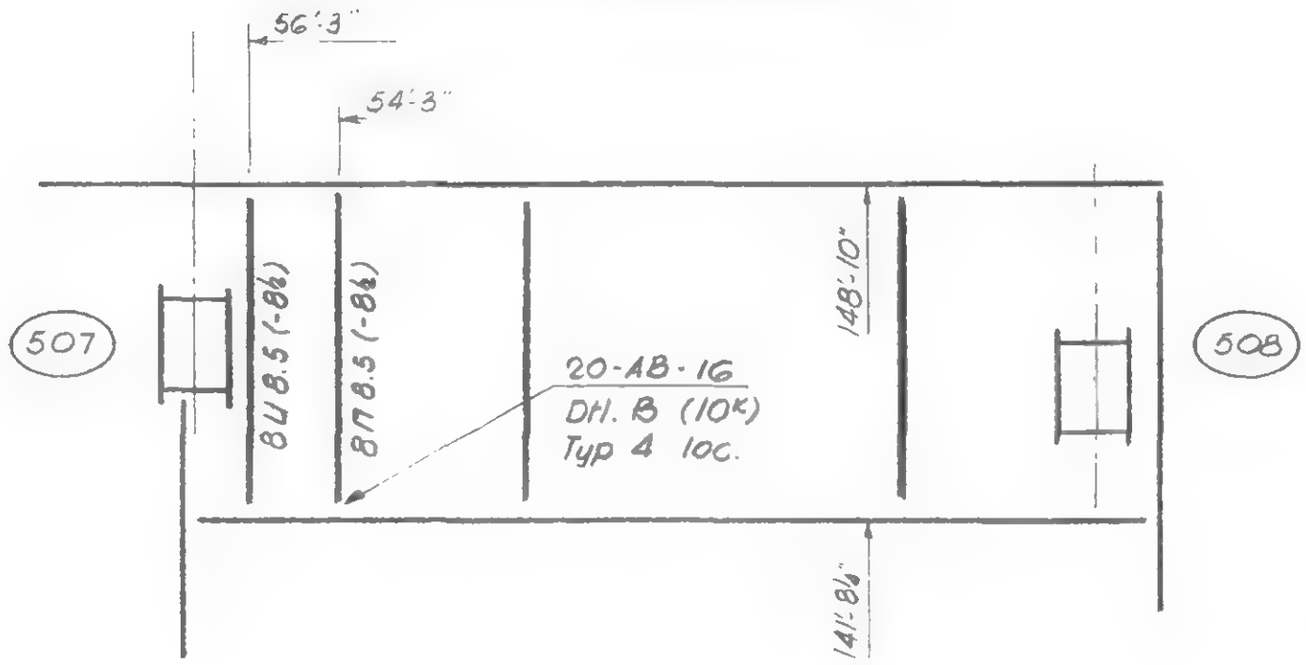

Plan - Floor 78

See Structural Steel Plans for members and member sizes not shown.

LICENSED PROFESSIONAL ENGINEER — LESLIE E. ROBERTSON — No. 34360 — UNIVERSITY OF THE STATE OF NEW YORK

DESIGNED

DRAWN

G.T.H.

REVIEWED

20-A-60

SKILLING, HELLE, CHRISTIANSEN, ROBERTSON — Structural & Civil Engineers

PROJECT THE WORLD-TRADE-CENTER- | TITLE STRUCTURAL STEEL - DETAIL G1 | DATE 9-27-68

REVISIONS

10-9-68

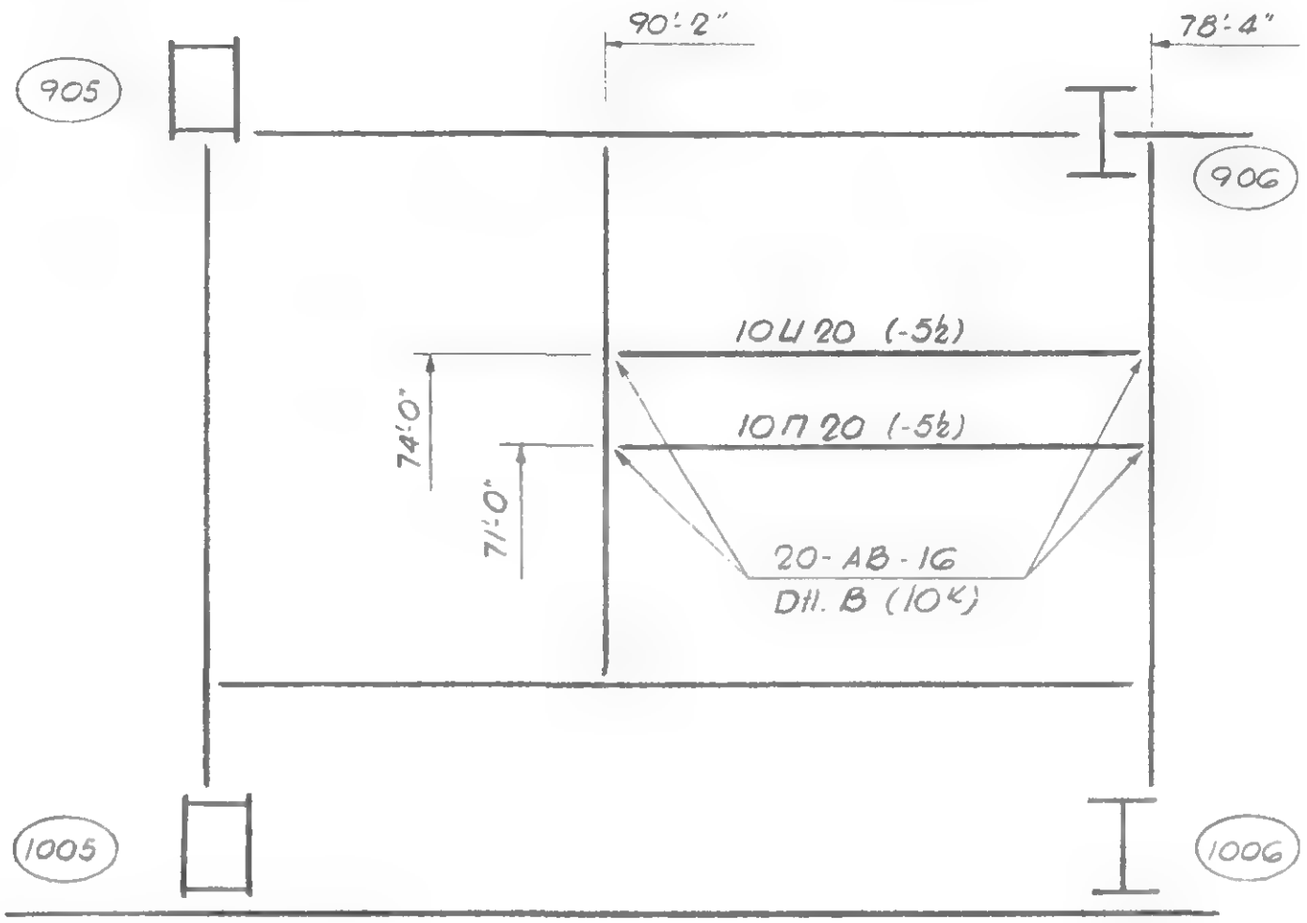

Columns are shown at Floor 78

See Structural Steel Plans for members and member sizes not shown.

Plan - Floors 78, 84, 91, 93, 100

LICENSED PROFESSIONAL ENGINEER
LESLIE E. ROBERTSON
No. 34360
UNIVERSITY OF THE STATE OF NEW YORK

DESIGNED

DRAWN

G.T.H.
REVIEWED

20-A-G1

SKILLING, HELLE, CHRISTIANSEN, ROBERTSON — Structural & Civil Engineers

PROJECT THE WORLD TRADE CENTER | TITLE STRUCTURAL STEEL - DETAIL G2 | DATE 9-27-68

REVISIONS

10-9-68

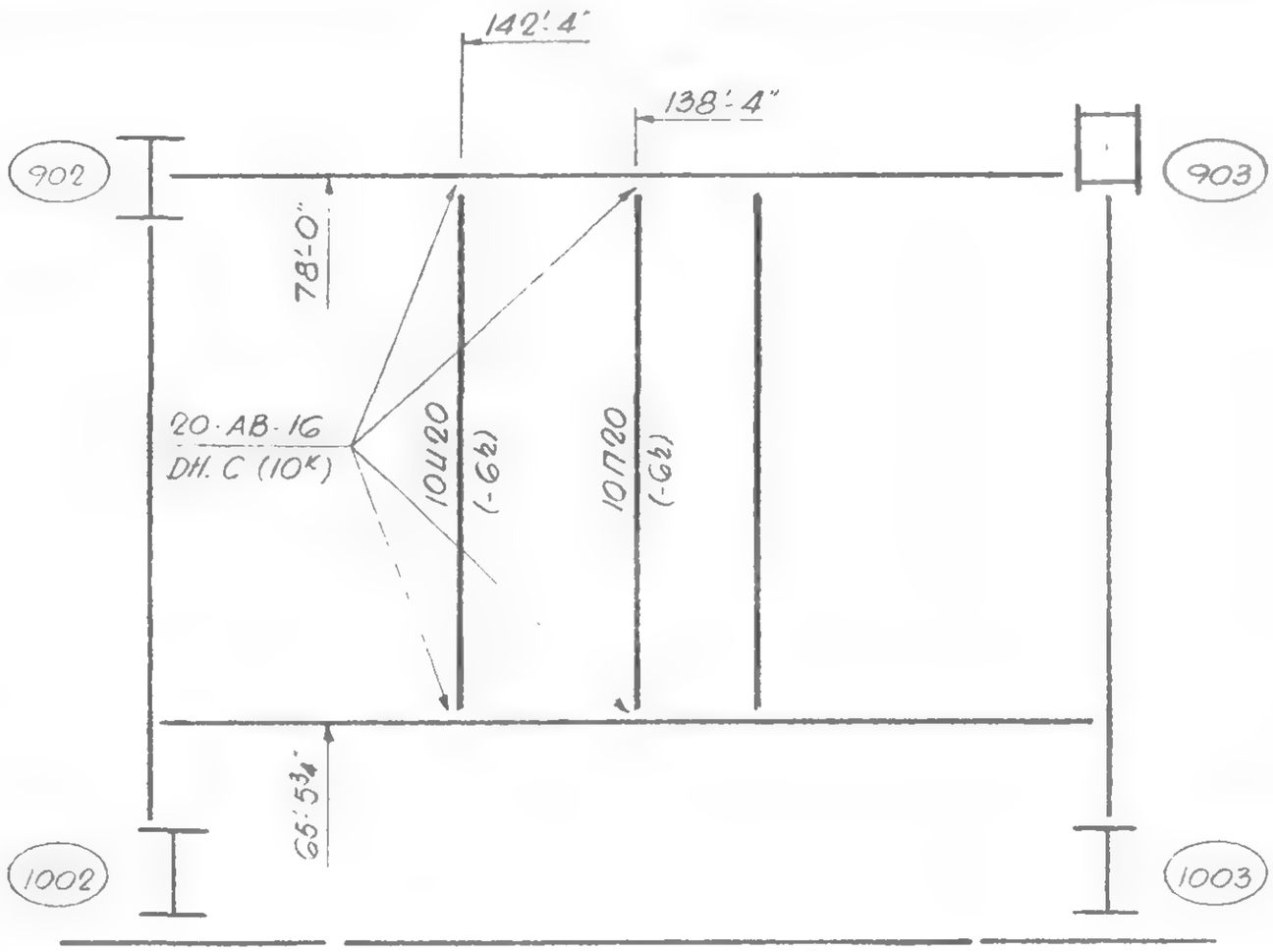

Plan - Floor 78

See Dwg. SA-86 for members and member sizes not shown.

LICENSED PROFESSIONAL ENGINEER
LESLIE E. ROBERTSON
No. 34360
UNIVERSITY OF THE STATE OF NEW YORK

DESIGNED

DRAWN

G.T.H

REVIEWED

20-A-62

SKILLING, HELLE, CHRISTIANSEN, ROBERTSON — Structural & Civil Engineers

PROJECT: THE WORLD TRADE CENTER

TITLE: STRUCTURAL STEEL - DETAIL G3

DATE: 9-27-68

REVISIONS

10-9-68

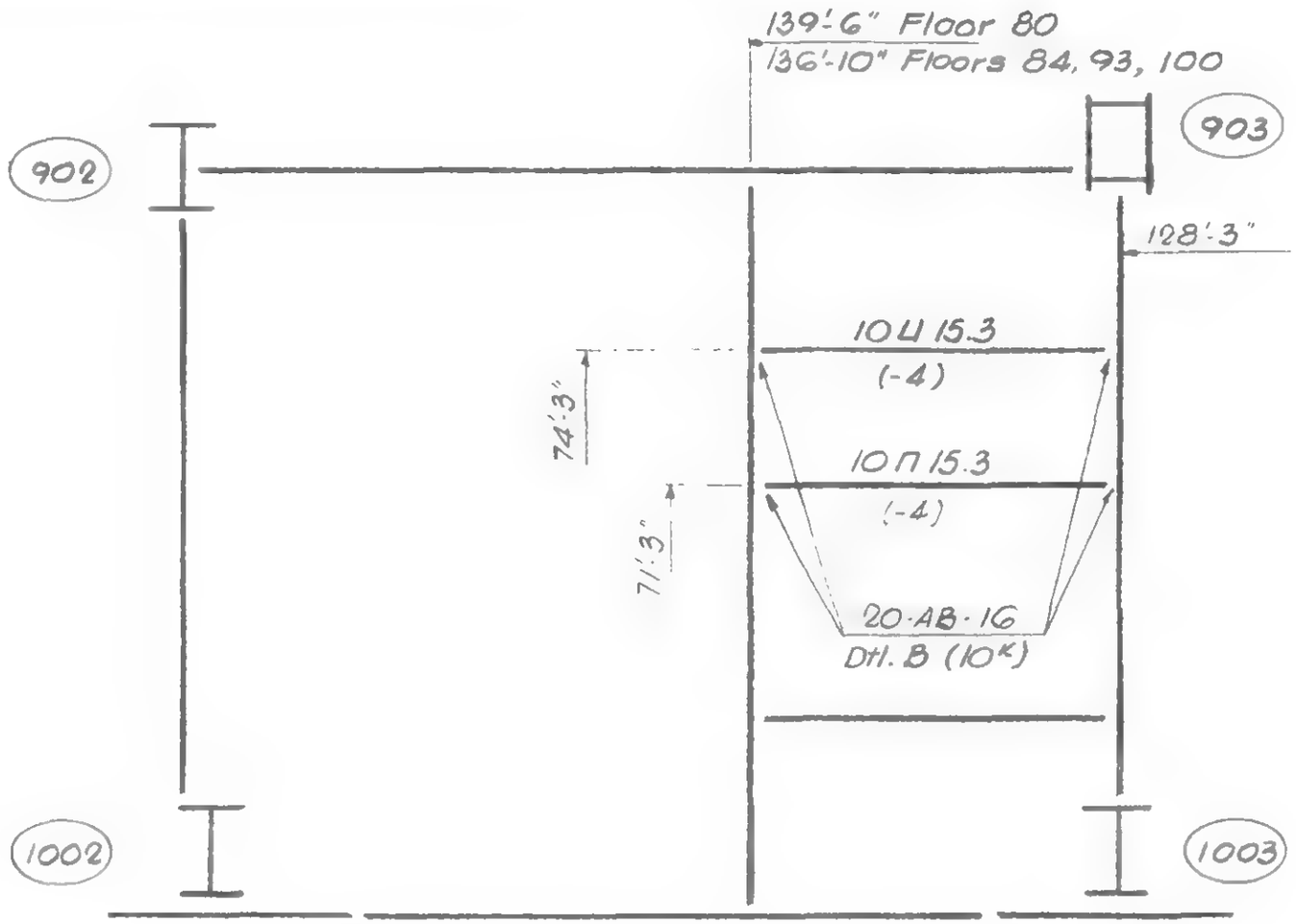

Columns are shown at Floor 80

Plan - Floors 80, 84, 93, 100

See Structural Steel Plan for members and member sizes not shown.

LICENSED PROFESSIONAL ENGINEER
LESLIE E. ROBERTSON
No. 34360
UNIVERSITY OF THE STATE OF NEW YORK

DESIGNED

DRAWN

G.T.H.

REVIEWED

20-A-G3

SKILLING, HELLE, CHRISTIANSEN, ROBERTSON — Structural & Civil Engineers

PROJECT ~~THE WORLD TRADE CENTER~~ | TITLE STRUCTURAL STEEL - DETAIL G4 | DATE ~~9-27-68~~

REVISIONS

10-9-68
11-27-68
6-24-69

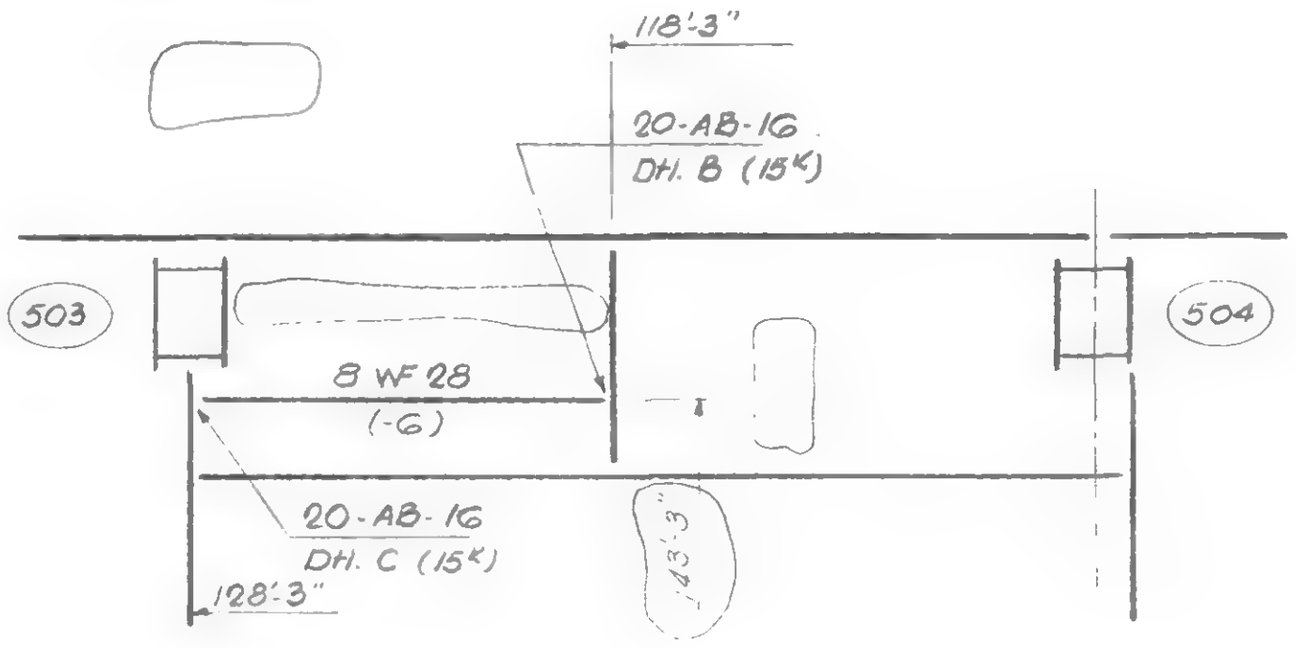

Plan - Floor 81

See Structural Plan for members and member sizes not shown

LICENSED PROFESSIONAL ENGINEER
LESLIE E. ROBERTSON
No. 34360
UNIVERSITY OF THE STATE OF NEW YORK

DESIGNED

DRAWN

G.T.H.

REVIEWED

20-AB-64

SKILLING, HELLE, CHRISTIANSEN, ROBERTSON — Structural & Civil Engineers

PROJECT THE WORLD TRADE CENTER | TITLE STRUCTURAL STEEL - DETAIL G5 | DATE 9-27-68

REVISIONS

10-9-68
11-22-68
3-21-69

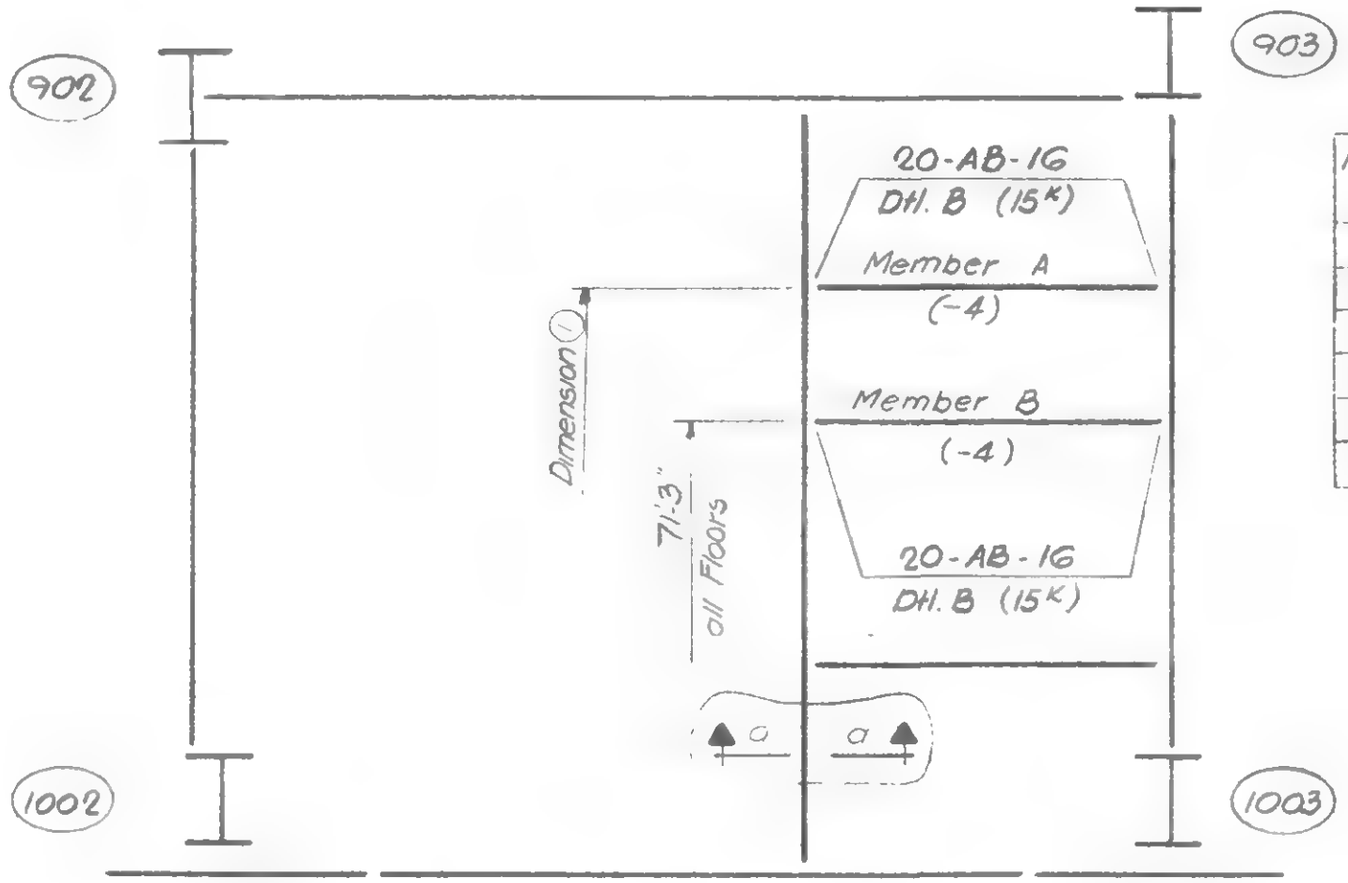

Floor	Member A	Member B	Dim. (1)
50	10WF25	10WF25	74'-3"
58	10WF25	10WF21	74'-3"
59	10WF25	10WF25	74'-3"
81	10WF25	10WF25	74'-3"
91	10WF25	10WF25	74'-3"
92	10WF25	12WF31	75'-3"

Columns shown at floor 81

Plan - Floors 50, 58, 59, 81, 91 & 92

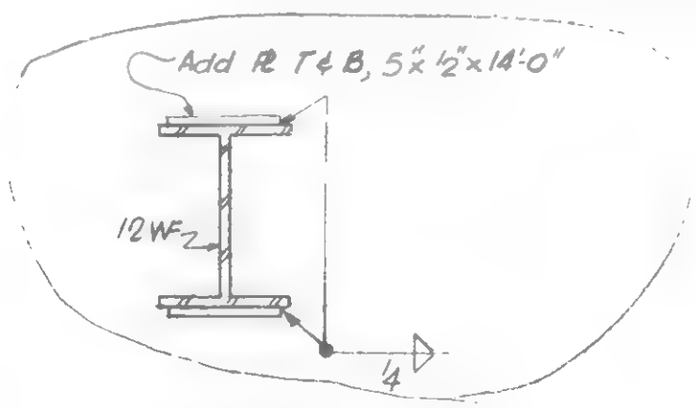

Section a-a
Floors 50, 59 only

See Structural Steel Plan for members and member sizes not shown

LICENSED PROFESSIONAL ENGINEER — LESLIE E. ROBERTSON — No. 34250 — UNIVERSITY OF THE STATE OF NEW YORK

DESIGNED

DRAWN
G.T.H.

REVIEWED

20-A-65

SKILLING, HELLE, CHRISTIANSEN, ROBERTSON — Structural & Civil Engineers

PROJECT: THE WORLD TRADE CENTER | TITLE: STRUCTURAL STEEL - DETAIL GG | DATE: 9-27-68

REVISIONS

10-9-68

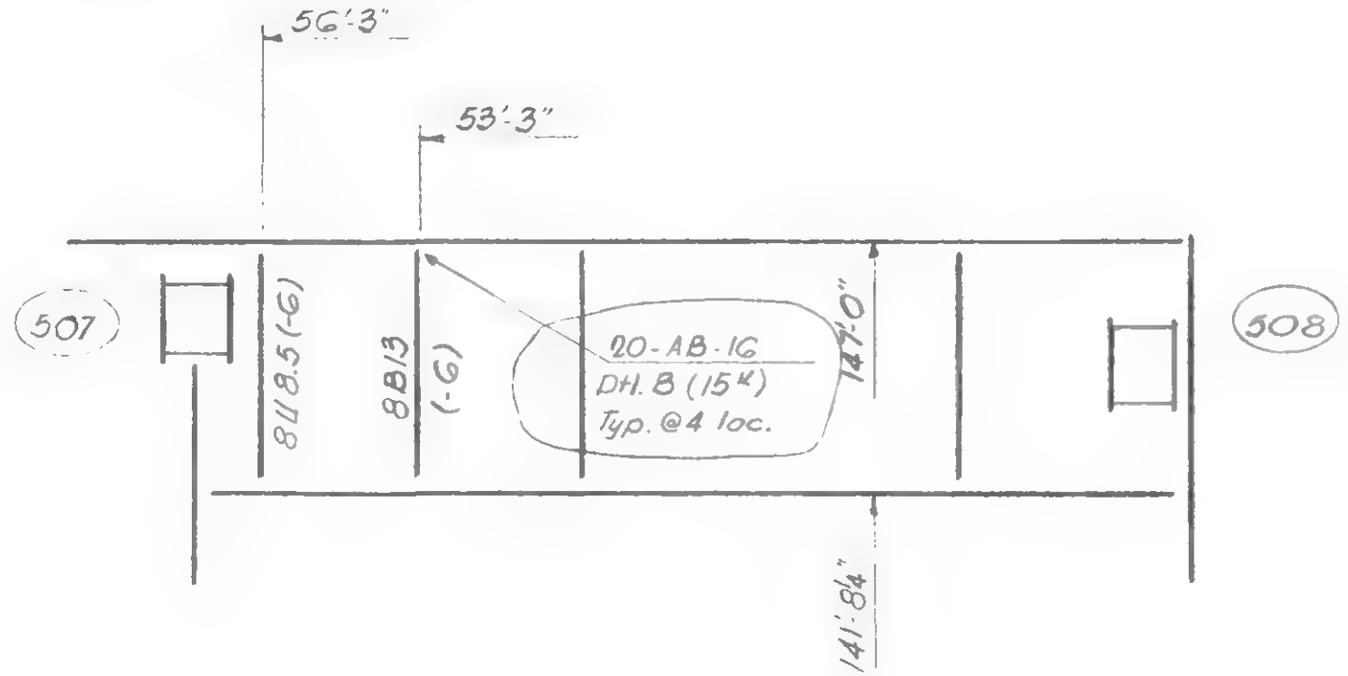

Plan - Floor 82

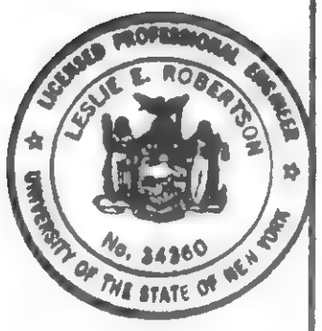

See Dwg. SA-90 for member and member sizes not shown.

DESIGNED

DRAWN

G.T.H.

REVIEWED

20-A-66

SKILLING, HELLE, CHRISTIANSEN, ROBERTSON — Structural & Civil Engineers

PROJECT THE WORLD TRADE CENTER | TITLE STRUCTURAL STEEL - DETAIL G7 | DATE 9-27-68

REVISIONS

10-9-68
11-27-68

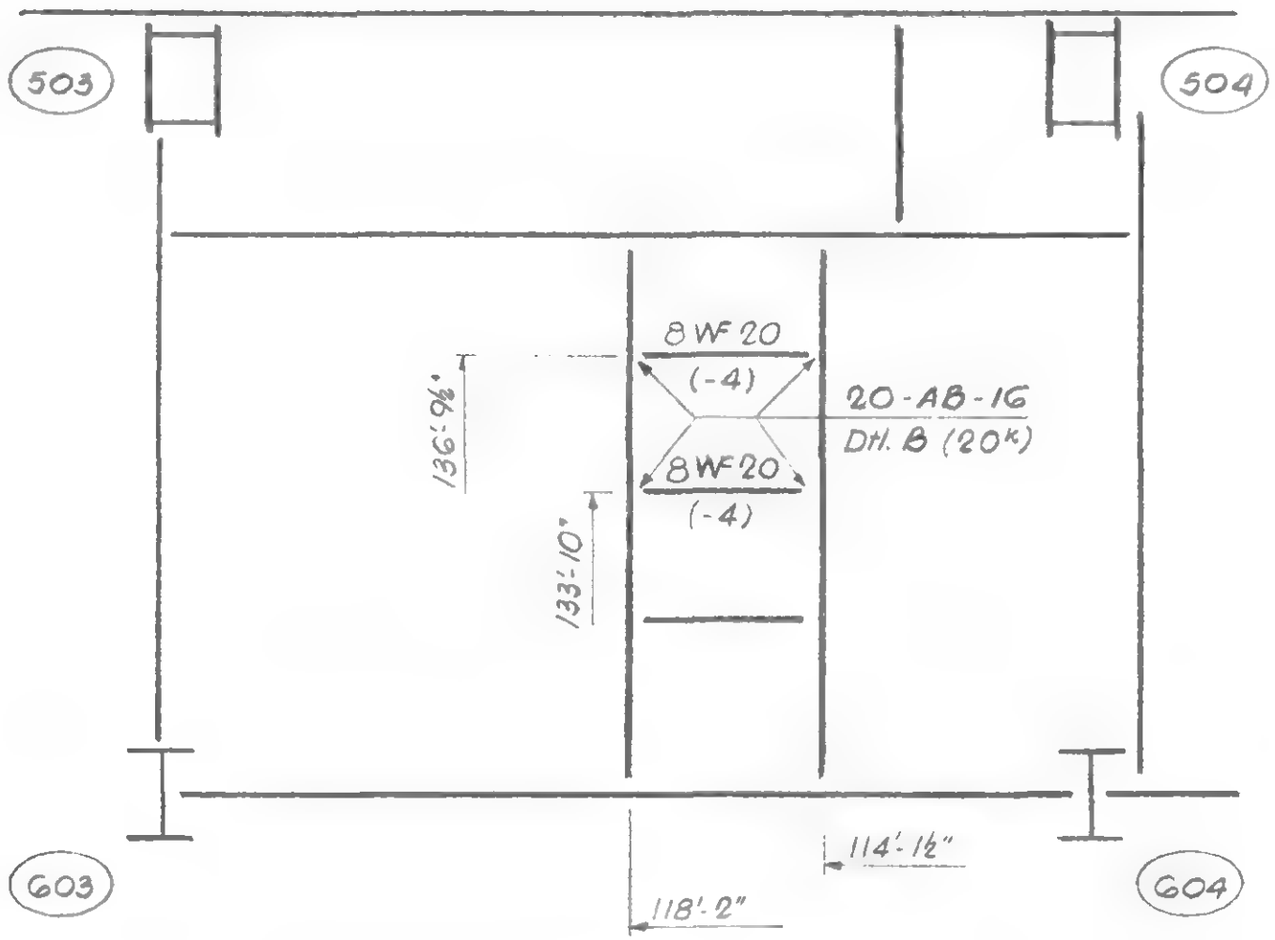

Plan - Floor 83

See Structural Plans for members and member sizes not shown.

LICENSED PROFESSIONAL ENGINEER
LESLIE E. ROBERTSON
No. 34360
UNIVERSITY OF THE STATE OF NEW YORK

DESIGNED

DRAWN

G.T.H

REVIEWED

20-AB-67

SKILLING, HELLE, CHRISTIANSEN, ROBERTSON — Structural & Civil Engineers

PROJECT THE WORLD TRADE CENTER | TITLE STRUCTURAL STEEL - DETAIL 68 | DATE 9-27-68

REVISIONS

1-9-68

11-27-68

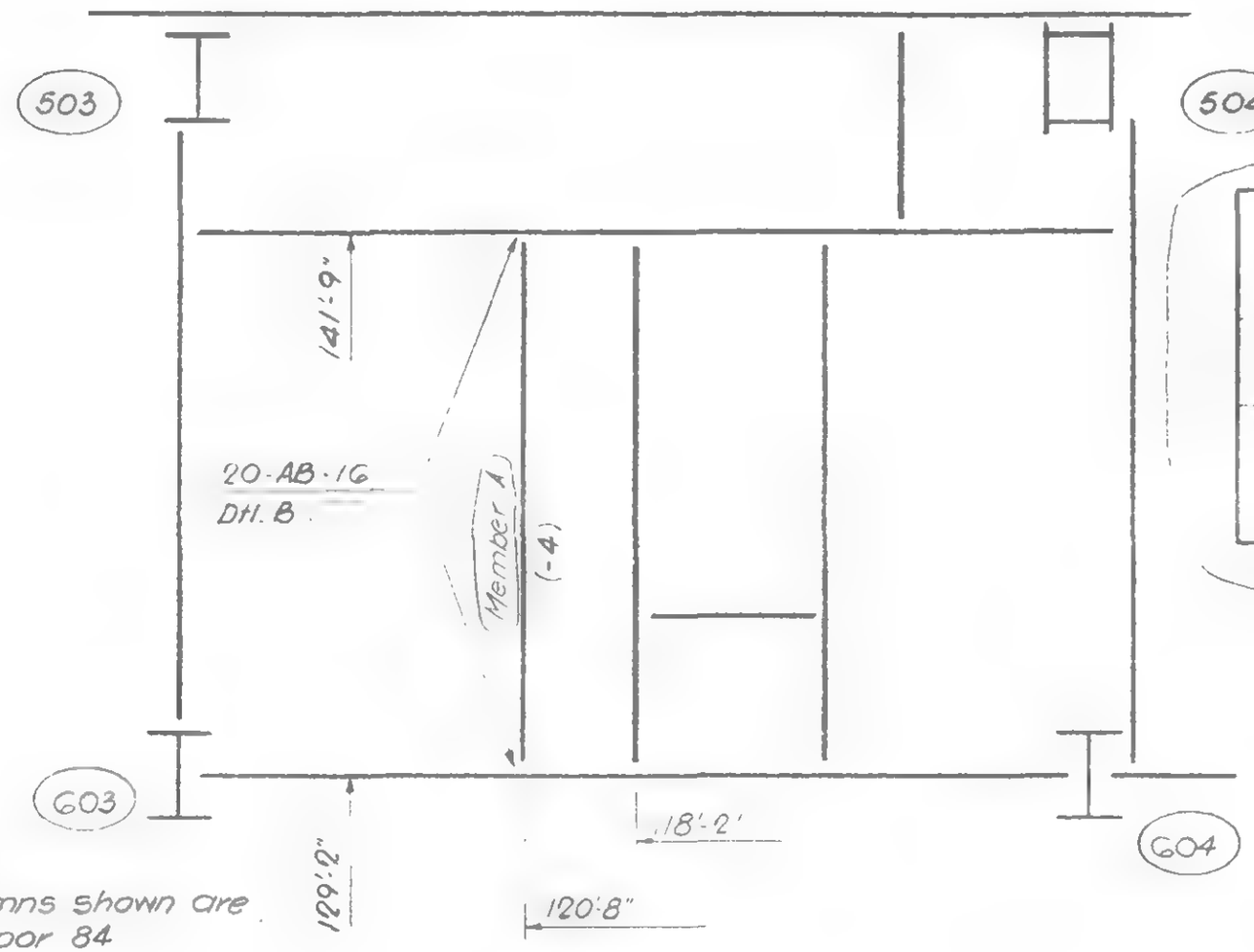

Tower	Floors	Member A	Connection Reaction
A	84, 91, 93, 99	8B13	10K
B	84	8WF40	20K
	91	8WF28	15K
	92	8WF40	20K

Columns shown are at floor 84

PLAN

Tower A - Floors 84, 91, 93, 99

Tower B - Floors 84, 91, 92

See Structural Steel Plans for members and member sizes not shown.

LICENSED PROFESSIONAL ENGINEER — LESLIE E. ROBERTSON — No. 34960 — STATE OF NEW YORK

DESIGNED

DRAWN

REVIEWED

20-AB-68

SKILLING, HELLE, CHRISTIANSEN, ROBERTSON — Structural & Civil Engineers

PROJECT THE WORLD TRADE CENTER | TITLE STRUCTURAL STEEL - DETAIL 69 | DATE 9-27-68

REVISIONS

10-9-68

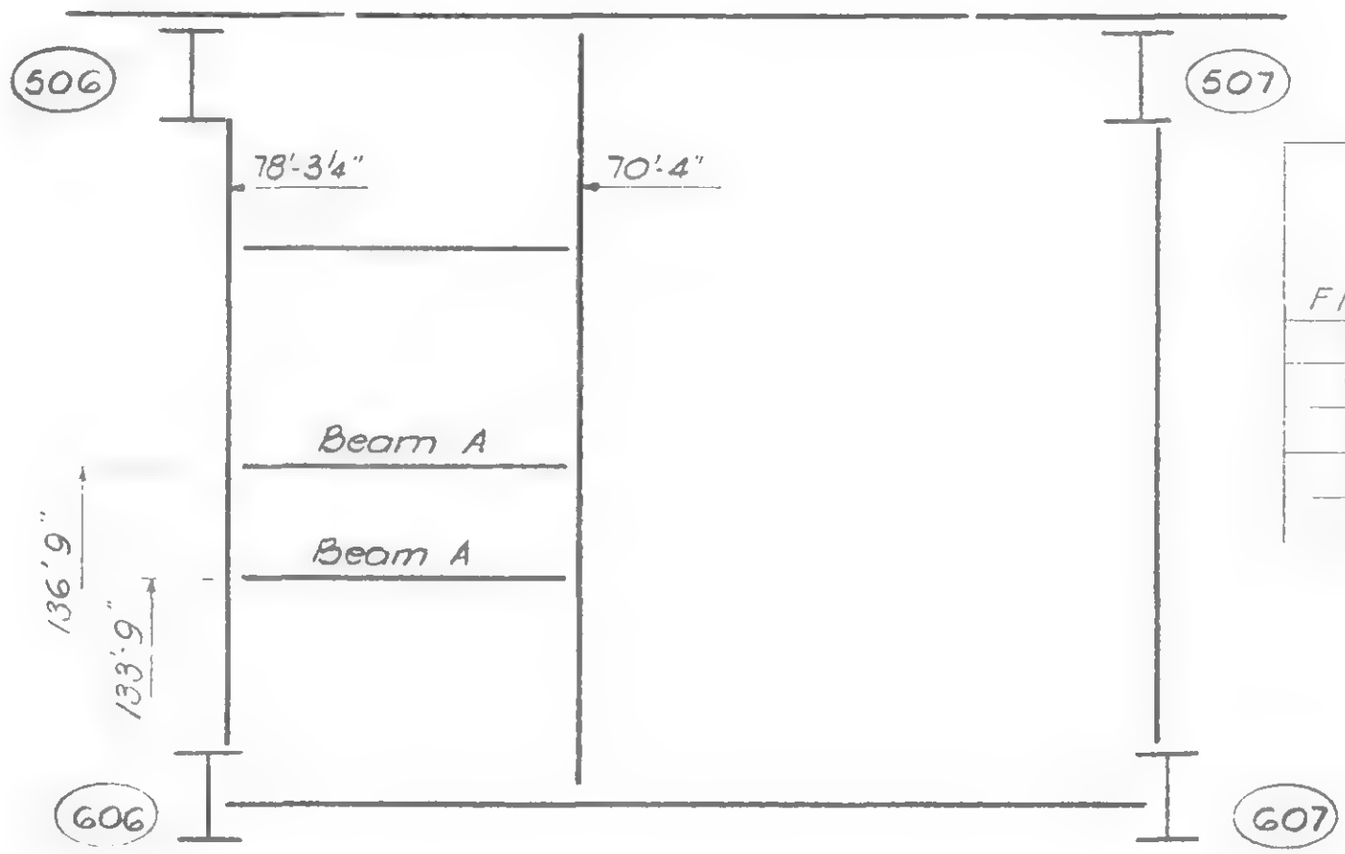

Floor	Beam A Size	Beam A End connections 20-AB-16, Dtl. B
84	12 B 19	15K
91	8 B 13	15K
92	12 WF 27	25K
93	8 C 11.5	10K
99	8 C 11.5	10K

Plan - Floors 84, 91, 92, 93, 99

See Structural Steel Plan for members and member sizes not shown.

LICENSED PROFESSIONAL ENGINEER — LESLIE E. ROBERTSON — No. 34360 — UNIVERSITY OF THE STATE OF NEW YORK

DESIGNED

DRAWN

REVIEWED

20-A-69

SKILLING, HELLE, CHRISTIANSEN, ROBERTSON — Structural & Civil Engineers

PROJECT: THE WORLD TRADE CENTER | TITLE: STRUCTURAL STEEL - DETAIL 70 | DATE: 11-27-68

REVISIONS

-

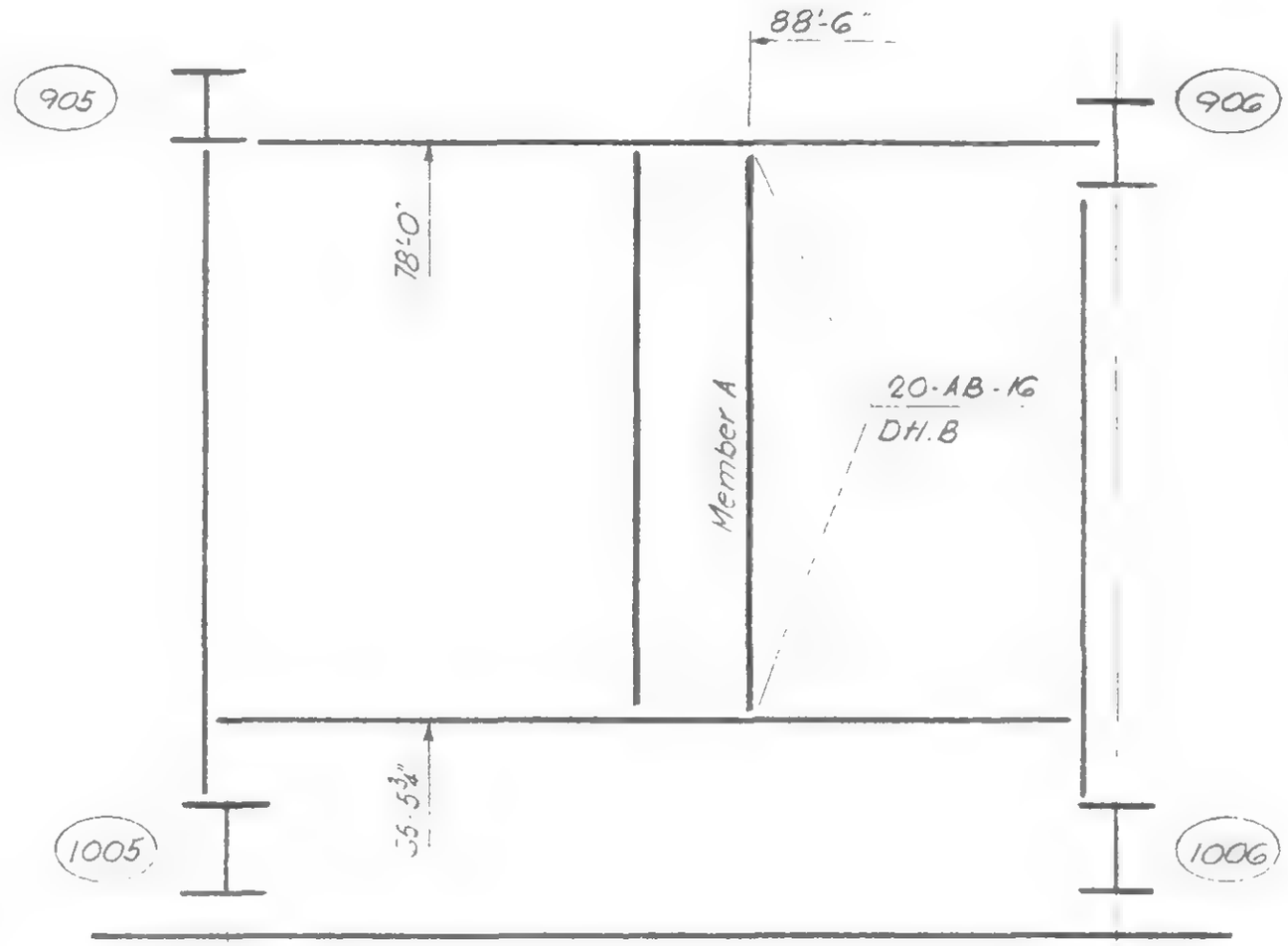

Floor	Member A	Connection Reaction
91	10WF25	10k
92	10WF45	20k

Plan - Floors 91, 92

See Structural Steel Plans for members and member sizes not shown.

LICENSED PROFESSIONAL ENGINEER — LESLIE E. ROBERTSON — No 34360 — UNIVERSITY OF THE STATE OF NEW YORK

DESIGNED

DRAWN
G.T.H.

REVIEWED

20 - B - 70

SKILLING, HELLE, CHRISTIANSEN, ROBERTSON — Structural & Civil Engineers

PROJECT THE WORLD TRADE CENTER | TITLE STRUCTURAL STEEL DETAIL 71 | DATE 11-22-68

REVISIONS

3-21-69

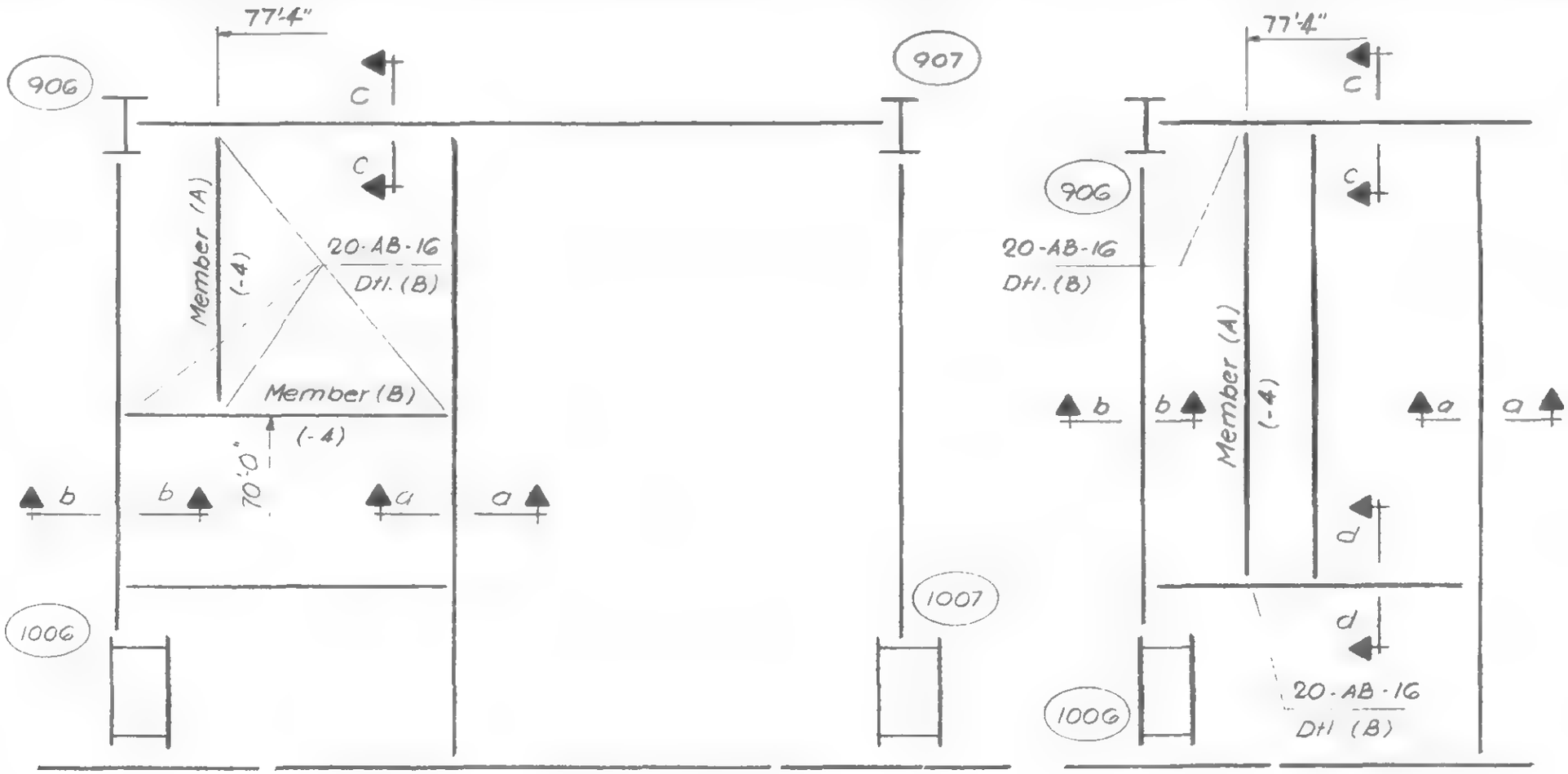

Plan - Floors 50, 58, 74

Plan - Floor 59

Floor	Member A Section	Member A End Reactions	Member B Section	Member B End Reactions	Section	Cover Pl P Type	Cover Pl P Size	Cover Pl P Weld (1)
50	8 WF 20	20.0 K	8 WF 17	15.0 K	a-a	II	5 × 1/4	1/4
					b-b	II	3 × 1/2	1/4
					c-c	II	5 × 1/2	5/16
58	8 WF 17	15.0 K	8 WF 17	10.0 K	a-a	none		
					b-b	II	3 × 1/2	1/4
					c-c	none		
59	12 WF 36	25.0 K	—	—	a-a	II	5 × 1/4	1/4
					b-b	I	5 1/2 × 1/4	1/4
					c-c	II	5 × 1/2	5/16
					d-d	II	3 × 3/4	3/8
74	8 WF 17	15.0 K	8 WF 17	10.0 K	none	—	—	—

See Structural Steel Plans for members and member sizes not shown.

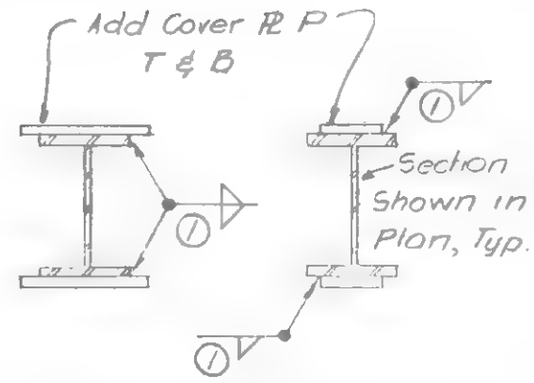

Sections a-a thru d-d

LICENSED PROFESSIONAL ENGINEER — LESLIE E. ROBERTSON — No 34360 — UNIVERSITY OF THE STATE OF NEW YORK

DESIGNED

DRAWN G. T. H

REVIEWED

20-B-71

SKILLING, HELLE, CHRISTIANSEN, ROBERTSON — Structural & Civil Engineers

PROJECT THE WORLD TRADE CENTER | TITLE STRUCTURAL STEEL DETAIL 72 | DATE 11-22-68

REVISIONS

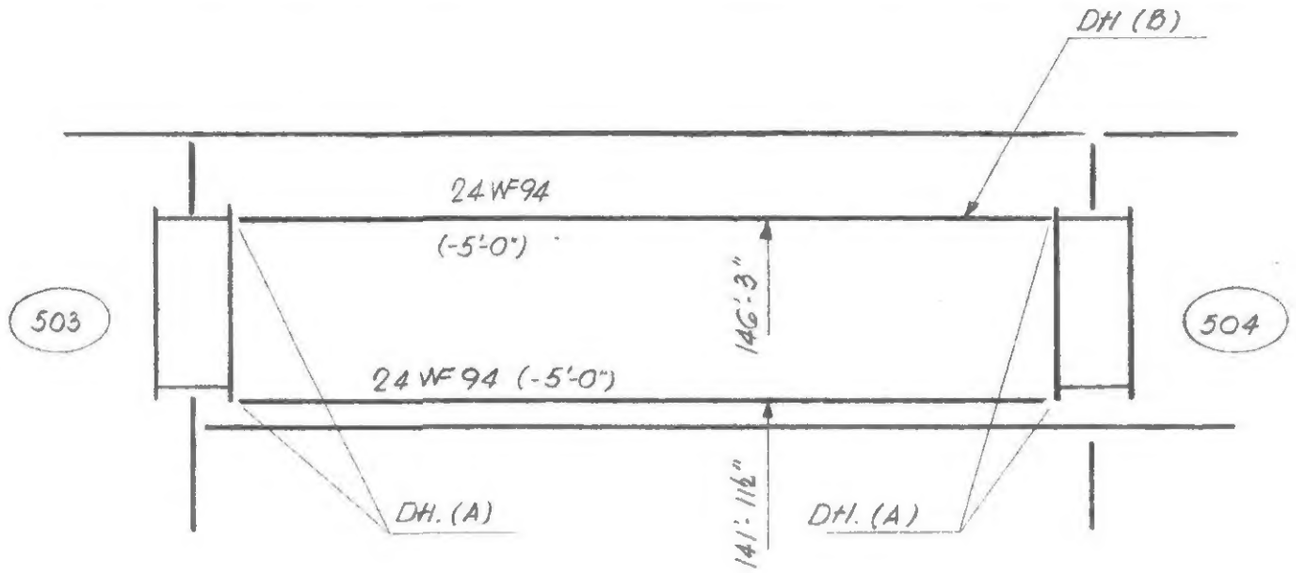

Plan - Floor 46

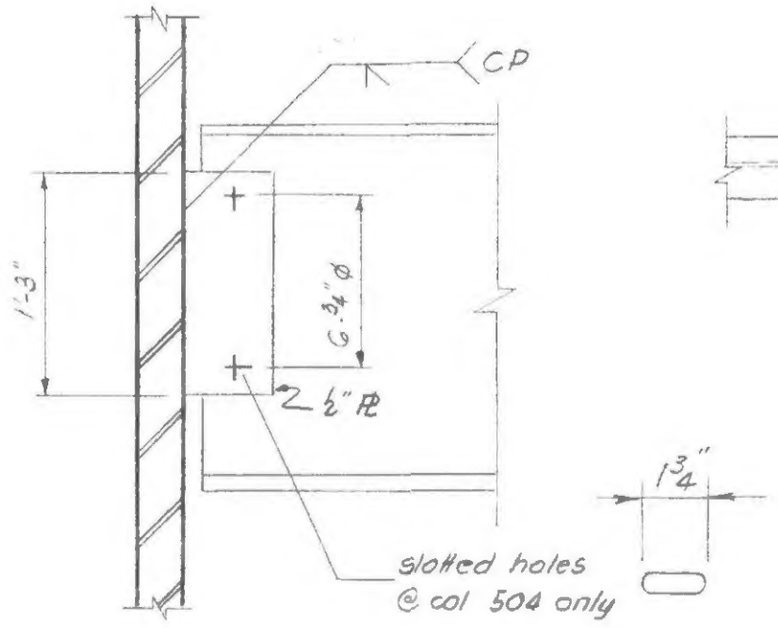

Detail (A)

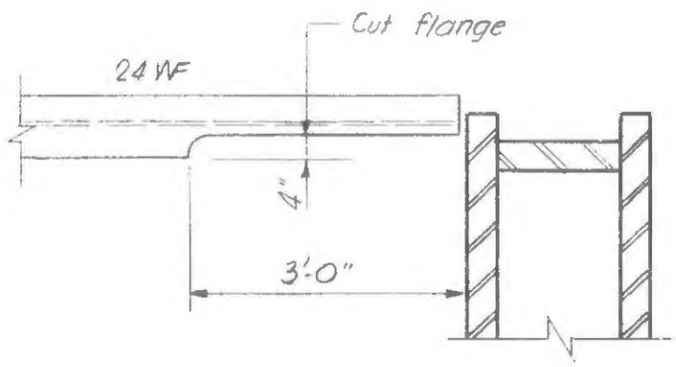

Detail (B)

See Structural Steel Plans for members and member sizes not shown.

LICENSED PROFESSIONAL ENGINEER
LESLIE E. ROBERTSON
No. 34360
UNIVERSITY OF THE STATE OF NEW YORK

DESIGNED

DRAWN
G.T.H

REVIEWED

20-AB-72

SKILLING, HELLE, CHRISTIANSEN, ROBERTSON — Structural & Civil Engineers

PROJECT: THE WORLD TRADE CENTER | TITLE: STRUCTURAL STEEL DETAIL 73 | DATE: 4-9-69

REVISIONS

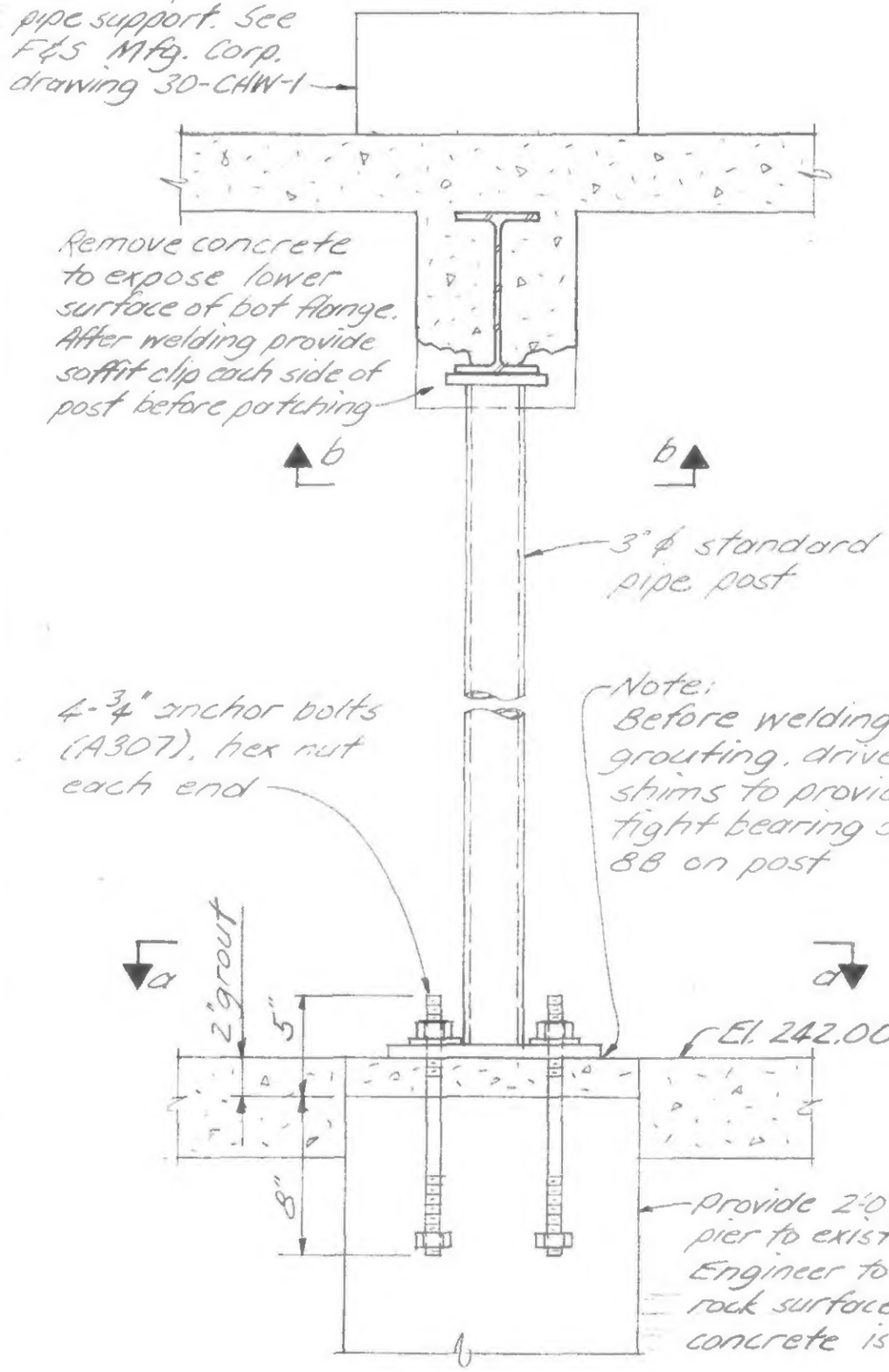

Elevation

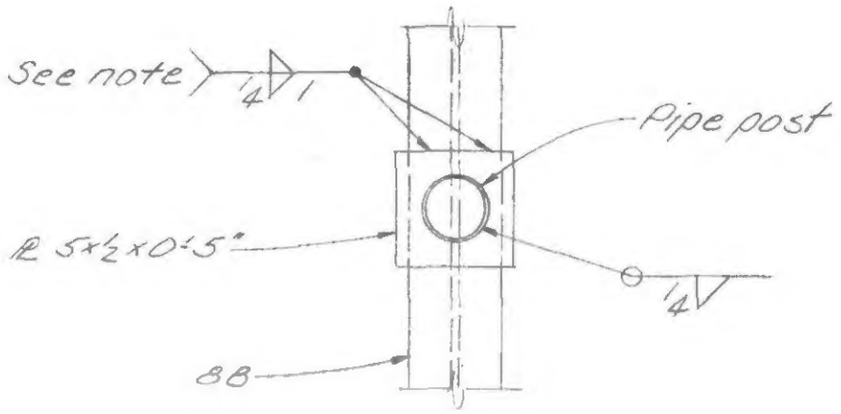

Section b-b

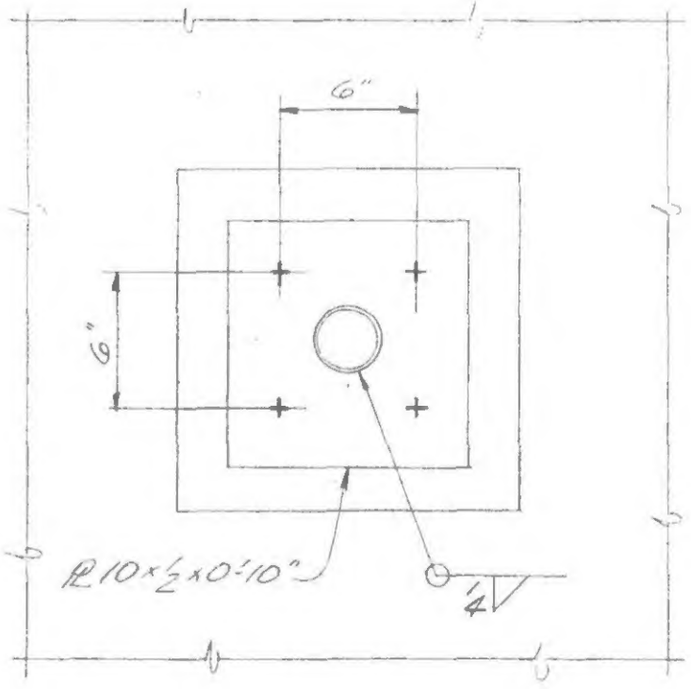

Section a-a

LICENSED PROFESSIONAL ENGINEER
LESLIE E. ROBERTSON
No 34360
UNIVERSITY OF THE STATE OF NEW YORK

DESIGNED H. Roet
DRAWN J. Adams
REVIEWED H. Roet

20-A-73

SKILLING, HELLE, CHRISTIANSEN, ROBERTSON — Structural & Civil Engineers

PROJECT THE WORLD TRADE CENTER | TITLE STRUCTURAL STEEL - DETAIL 75 | DATE 8-19-69

REVISIONS

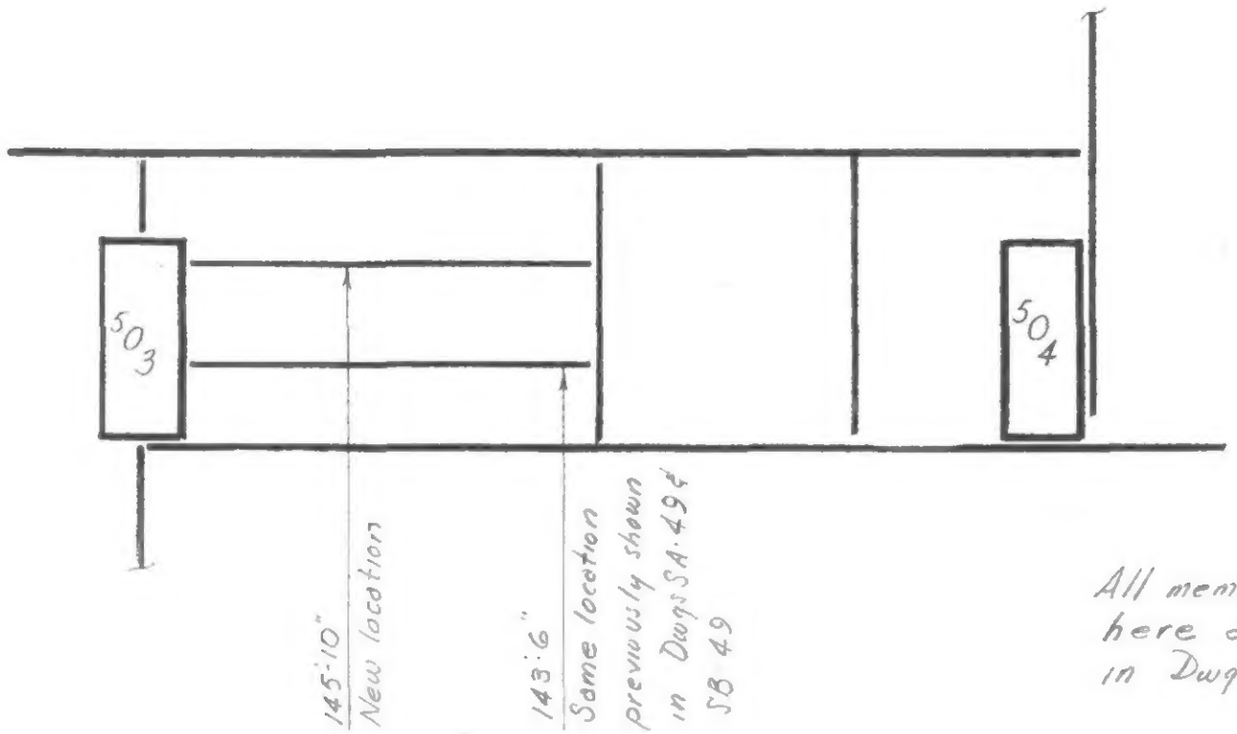

All member sizes & locations not shown here are same as originally shown in Dwgs SA-49 & SB-49

PLAN - FLOOR 41

DESIGNED

DRAWN

REVIEWED

20-AB-75